These plans are to serve as an example only. They may not necessarily reflect current standards or practices. Contact Development Section with any questions or suggestions.

SEC/SUR 26 TWP 34N RGE 29W

This info can be found in TMS. See TMS Instructions in Instructions & Tips in Sharepoint.

From Bridge Memo

(59'-93'-59') PRESTRESSED CONCRETE I-GIRDER SPANS

This set of example plans is based on several bridge projects. It is intended to be used for reference only, covering a variety of structural components. Some details on the following sheets may not necessarily match what is shown on this front sheet.

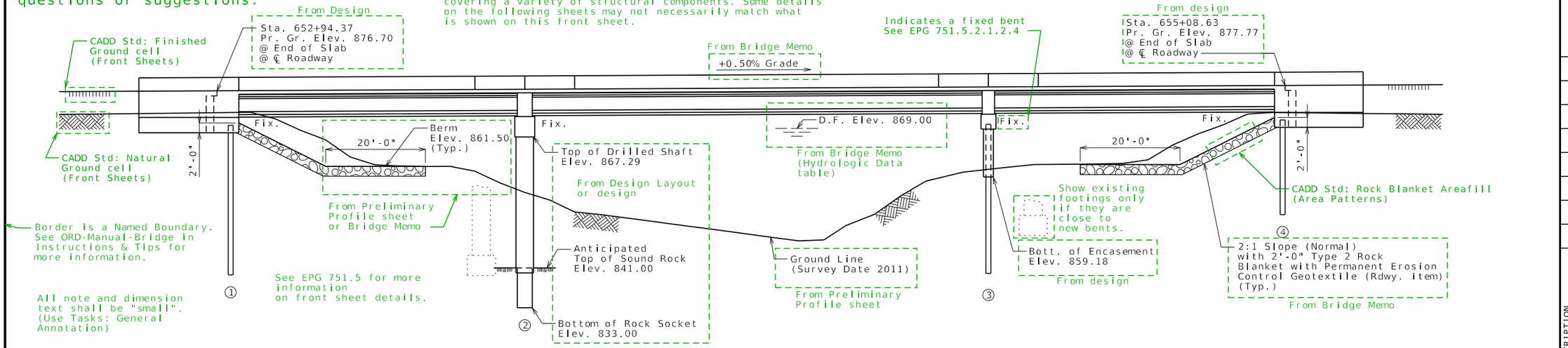

Old roadway fill under the ends of the bridge shall be removed as shown. Removal of old roadway fill will be considered completely covered by the contract unit price for roadway excavation.

Note E1.1, EPG 751.50 If required (when specified on Design Layout)

Roadway fill shall be completed to the final roadway section and up to the elevation of the bottom of the concrete beam within the limits of the structure and for not less than 25 feet in back of the fill face of the end bents before any piles are driven for any bents falling within the embankment section.

Note E1.4, EPG 751.50 if required.

CADD Std: Medium Text (Titles) (General Annotation)

GENERAL ELEVATION

Boring locations from Final Geotechnical Report (in eProjects) Show location of all borings

CADD Std.: Boring Symbol (Front Sheets)

CADD Std: North Arrow (Front Sheets) If Location Sketch is shown on front sheet, North arrow should be shown there.

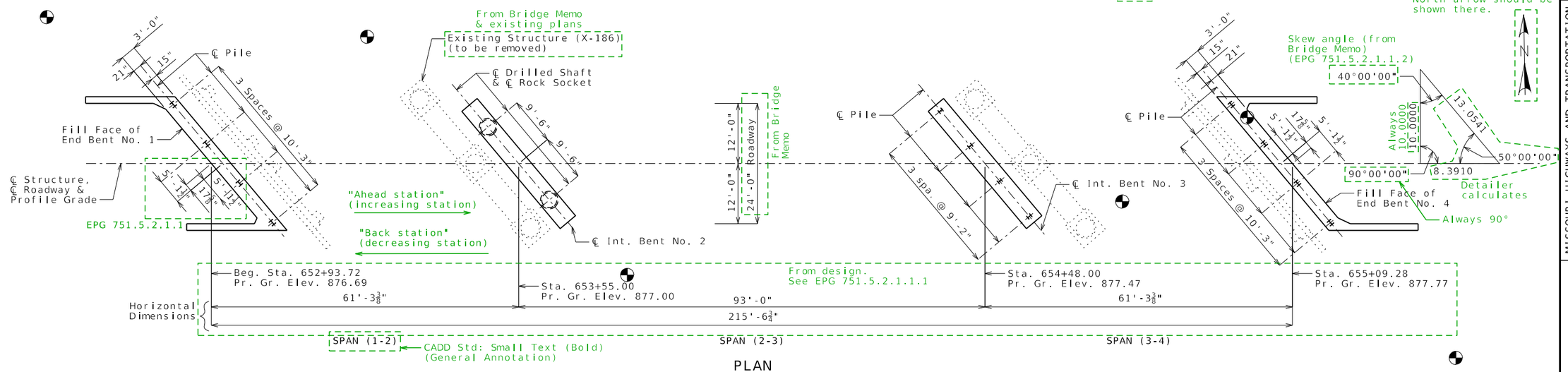

CADD Std: Small Text (Bold) (General Annotation)

PLAN

Indicates location of borings.

Notice and Disclaimer Regarding Boring Log Data

CADD Std: E3.2 Notice and Disclaimer (Detailing Notes). If the note will not fit on this sheet, keep the "Indicates location of borings." portion and add a line stating "For Notice and Disclaimer Regarding Boring Log Data, see Sheet No. 2."

The locations of all subsurface borings for this structure are shown on the plan sheet(s) for this structure. The boring data for all locations indicated, as well as any other boring logs or other factual records of subsurface data and investigations performed by the department for the design of the project, are shown on Sheet(s) No. __ and may be included in the Electronic Bridge Deliverables. They will also be available from the Project Contact upon written request. No greater significance or weight should be given to the boring data depicted on the plan sheets than is given to the subsurface data available from the district or elsewhere.

The Commission does not represent or warrant that any such boring data accurately depicts the conditions to be encountered in constructing this project. A contractor assumes all risks it may encounter in basing its bid prices, time or schedule of performance on the boring data depicted here or those available from the district, or on any other documentation not expressly warranted, which the contractor may obtain from the Commission.

From Preliminary Plat Sheet. See EPG 751.5.2.1.3.4

From Bridge Memo

B.M. 306 = SET "O" SQUARE CUT AT S.E. CORNER OF BRIDGE HEADWALL AT HORSE CREEK BRIDGE ON RTE. B, ELEV. 973.158'

BRIDGE: ROUTE B OVER HORSE CREEK

ROUTE B FROM ROUTE 71 TO ROUTE 97 ABOUT 2.5 MILES WEST OF ROUTE 97 — EPG 751.5.2.1.3.5

BEGINNING STATION 652+93.72 — From Bridge Memo

CADD Std: Front Sheet Text (General Annotation) (Also includes Sec/Sur, Twp, Rge at the top)

Designed Aug. 2019
Detailed Aug. 2019
Checked Aug. 2019

Note: This drawing is not to scale. Follow dimensions.

Sheet No. 1 of

DATE PREPARED	12/28/2023
ROUTE	
STATE	MO
DISTRICT	BR
SHEET NO.	1
COUNTY	
JOB NO.	
CONTRACT ID.	
PROJECT NO.	
BRIDGE NO.	EXAMPLE

DESCRIPTION

DATE

MISSOURI HIGHWAYS AND TRANSPORTATION COMMISSION

105 WEST CAPITOL
JEFFERSON CITY, MO 65102
1-888-ASK-MODOT (1-888-275-6636)

Example_plans_001_2023_front.dgn 12:39:22 PM 12/28/2023

CADD Std: B3.1 Estimated Quantities, Bridges (Detailing Notes)

Estimated Quantities

Item		Substr.	Superstr.	Total
Class 1 Excavation	cu. yard	80		80
Removal of Bridges (X-186)	lump sum			1
Drilled Shafts (3 ft. 6 in. Dia.)	linear foot	94		94
Rock Sockets (3 ft. 0 in. Dia.)	linear foot	32		32
Video Camera Inspection	each	4		4
Foundation Inspection Holes	linear foot	72		72
Sonic Logging Testing	each	4		4
Galvanized Structural Steel Piles (12 in.)	linear foot	196		196
Pile Point Reinforcement	each	8		8
Class B Concrete (Substructure)	cu. yard	70.4		70.4
Slab on Concrete I-Girder	sq. yard		635	635
Type D Barrier	linear foot		491	491
Type 6 (54 in.), Prestressed Concrete I-Girder	linear foot		632	632
Reinforcing Steel (Bridges)	pound	15,270		15,270
Steel Intermediate Diaphragm for P/S Concrete Girders	each		6	6
Slab Drain	each		36	36
Vertical Drain at End Bents	each			2
Plain Neoprene Bearing Pad	each		6	6
Laminated Neoprene Bearing Pad	each		12	12

Pay items & units from EPG 751.6

Detailer & checker calculate, then compare and agree upon numbers

All concrete above the construction joint in the end bents is included in the Estimated Quantities for Slab on Concrete I-Girder.

All reinforcement in the end bents is included in the Estimated Quantities for Slab on Concrete I-Girder.

All reinforcement in the intermediate bent concrete diaphragms except reinforcement embedded in the beam cap is included in the Estimated Quantities for Slab on Concrete I-Girder.

All concrete above the intermediate beam cap is included in the Estimated Quantities for Slab on Concrete I-Girder.

Notes from EPG 751.50, Section B

Foundation Data

Type	Design Data		Bent Number 1	2	3	4
Load Bearing Pile	Pile Type and Size		HP 12x53	---	---	HP 12x53
	Number	ea	4	---	---	4
	Approximate Length Per Each	ft	30	---	---	30
	Pile Point Reinforcement	ea	All	---	---	All
	Min. Galvanized Penetration (Elev.)	ft	Full length	---	---	Full length
	Pile Driving Verification Method		DF	---	---	DF
	Resistance Factor		0.4	---	---	0.4
	Minimum Nominal Axial Compressive Resistance	kip	505	---	---	505
Rock Socket	Number	ea	---	2	2	---
	Layer 1: Foundation Material		---	Rock	Rock	---
	Layer 1: Elevation Range	ft	---	838-835	844-839	---
	Layer 1: Minimum Nominal Axial Compressive Resistance (Side Resistance)	ksf	---	28.6	28.6	---
	Layer 2: Foundation Material		---	Rock	Rock	---
	Layer 2: Elevation Range	ft	---	835-821	839-830	---
	Layer 2: Minimum Nominal Axial Compressive Resistance (Side Resistance)	ksf	---	28.6	28.6	---
	Minimum Nominal Axial Compressive Resistance (Tip Resistance)	ksf	---	12.0	12.0	---

DF = FHWA-modified Gates Dynamic Formula

$$\text{Minimum Nominal Axial Compressive Resistance} = \frac{\text{Maximum Factored Loads}}{\text{Resistance Factor}}$$

$$\text{Minimum Nominal Axial Compressive Resistance (Side Resistance + Tip Resistance)} = \frac{\text{Maximum Factored Loads}}{\text{Resistance Factors}}$$

Notes from EPG 751.50, Section E2

Manufactured pile point reinforcement shall be used on all piles in this structure.

Sonic logging testing shall be performed on all drilled shafts and rock sockets.

CADD Std: E2.1 Foundation Data (Detailing Notes) Info from design & Design Layout

General Notes:

Notes from EPG 751.50, Section A

Design Specifications:

2020 AASHTO LRFD Bridge Design Specifications (9th Ed.)
Seismic Performance Category: A ← From Bridge Memo. If not specified, use "A"

Design Loading:

Vehicular = HL-93 ← From Bridge Memo
Future Wearing Surface = 35 lb/sf (Min.)
Earth = 120 lb/cf
Equivalent Fluid Pressure = 45 lb/cf
Superstructure: Simply-Supported, Non-Composite for dead load.
Continuous Composite for live load.

Design Unit Stresses:

Class B Concrete (Substructure)	f'c = 3,000 psi
Class B-2 Concrete (Drilled Shafts & Rock Sockets)	f'c = 4,000 psi
Class B-1 Concrete (Barrier)	f'c = 4,000 psi
Class B-2 Concrete (Superstructure, except Prestressed Girders and Barrier)	f'c = 4,000 psi
Reinforcing Steel (Grade 60)	fy = 60,000 psi
Steel Pile (ASTM A709 Grade 50)	fy = 50,000 psi

For precast prestressed panel stresses, see Sheet No. 18.
For prestressed girder stresses, see Sheets No. 14 & 15.

Neoprene Pads:

Neoprene bearing pads shall be 60 durometer and shall be in accordance with Sec 716.

Joint Filler:

All joint filler shall be in accordance with Sec 1057 for preformed sponge rubber expansion and partition joint filler, except as noted.

Reinforcing Steel:

Minimum clearance to reinforcing steel shall be 1 1/2", unless otherwise shown.

Traffic Handling: From Bridge Memo (Note A3.8)

Structure to be closed during construction. Traffic to be maintained on other routes. See roadway plans for traffic control.

Miscellaneous:

MoDOT Construction personnel will indicate the type of joint filler option used under the precast panels for this structure:

☐ Constant Joint Filler
☐ Variable Joint Filler

← CADD Std: A5.6 Indicate type of joint filler (Bridge Detailing Notes)

CADD Std: Hydrologic Data with Freeboard (Front Sheets)
See EPG 751.5.2.1.5.3
Info from Bridge Memo for stream crossing only.

Hydrologic Data

Drainage Area = 18 mi^2
Design Flood Frequency = 50 years
Design Flood Discharge = 5,700 cfs
Design Flood (D.F.) Elevation = 354.4
Base Flood (100-year)
Base Flood Elevation = 354.8
Base Flood Discharge = 6,700 cfs
Estimated Backwater = 0.77 ft
Average Velocity thru Opening = 5.7 ft/s
Freeboard (50-year)
Freeboard = 1.7 ft
Roadway Overtopping
Overtopping Flood Discharge = 3,700 cfs
Overtopping Flood Frequency = 10 years
Overtopping Flood Elevation = 354.1

See EPG 751.50 for General Notes and Estimated Quantities notes. Notes marked with [MS Cell] in EPG are available as cells in CADD Std: Detailing Notes.

"Notice and Disclaimer Regarding Boring Log Data" may be placed on this sheet if it would not fit on the front sheet. Add "For locations of borings, see Sheet No. 1"

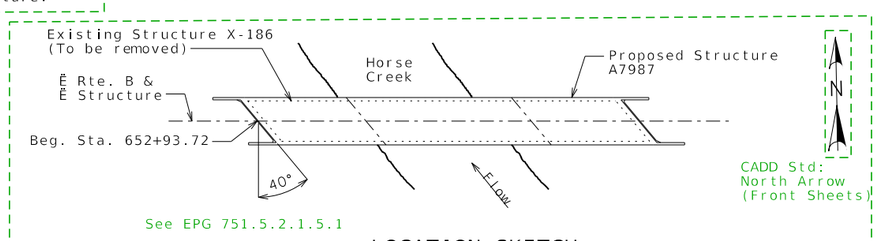

CADD Std: North Arrow (Front Sheets)

See EPG 751.5.2.1.5.1

LOCATION SKETCH

Estimated Quantities for Slab on Concrete I-Girder

Item		Total
Class B-2 Concrete	cu. yard	204
Reinforcing Steel (Epoxy Coated)	pound	49,540

Cell in Tasks: Bridge Detailing Notes (B3.21 "Estimated Quantities For)

Round to nearest 1 cubic yard (see EPG 751.50, notes after B3.21)

Notes in EPG 751.50 Section B3c

The table of Estimated Quantities for represents the quantities used by the State in preparing the cost estimate for concrete slabs. The area of the concrete slab will be measured to the nearest square yard longitudinally from end of slab to end of slab and transversely from out to out of bridge slab (or with the horizontal dimensions as shown on the plan of slab). Payment for prestressed panels, conventional forms, all concrete and epoxy coated reinforcing steel will be considered completely covered by the contract unit price for the slab. Variations may be encountered in the estimated quantities but the variations cannot be used for an adjustment in the contract unit price.

Method of forming the slab shall be as shown on the plans and in accordance with Sec 703. All hardware for forming the slab to be left in place as a permanent part of the structure shall be coated in accordance with ASTM A123 or ASTM B633 with a thickness class SC 4 and a finish type I, II or III.

The Estimated Quantities for Slab on Concrete I-Girder are based on skewed precast prestressed end panels.

The prestressed panel quantities are not included in the table of Estimated Quantities for Slab on Concrete I-Girder.

Class B-2 Concrete quantity is based on minimum top flange thickness and minimum joint material thickness.

CADD Std: Second Sheet Text (General Annotation)

Detailed Aug. 2019
Checked Aug. 2019

Note: This drawing is not to scale. Follow dimensions.

DATE PREPARED	12/28/2023
ROUTE	STATE MO
DISTRICT	BR
SHEET NO.	2
COUNTY	
JOB NO.	
CONTRACT ID.	
PROJECT NO.	
BRIDGE NO.	EXAMPLE

DESCRIPTION | DATE

MISSOURI HIGHWAYS AND TRANSPORTATION COMMISSION
105 WEST CAPITOL
JEFFERSON CITY, MO 65102
1-888-ASK-MODOT (1-888-275-6636)

See EPG 751.35 Concrete Pile Cap Integral End Bents.

End Bent No. 1 is shown looking back-station (if standing on the bridge, looking back toward the beginning station).
All other bents are shown looking ahead-station (looking ahead from beginning station).

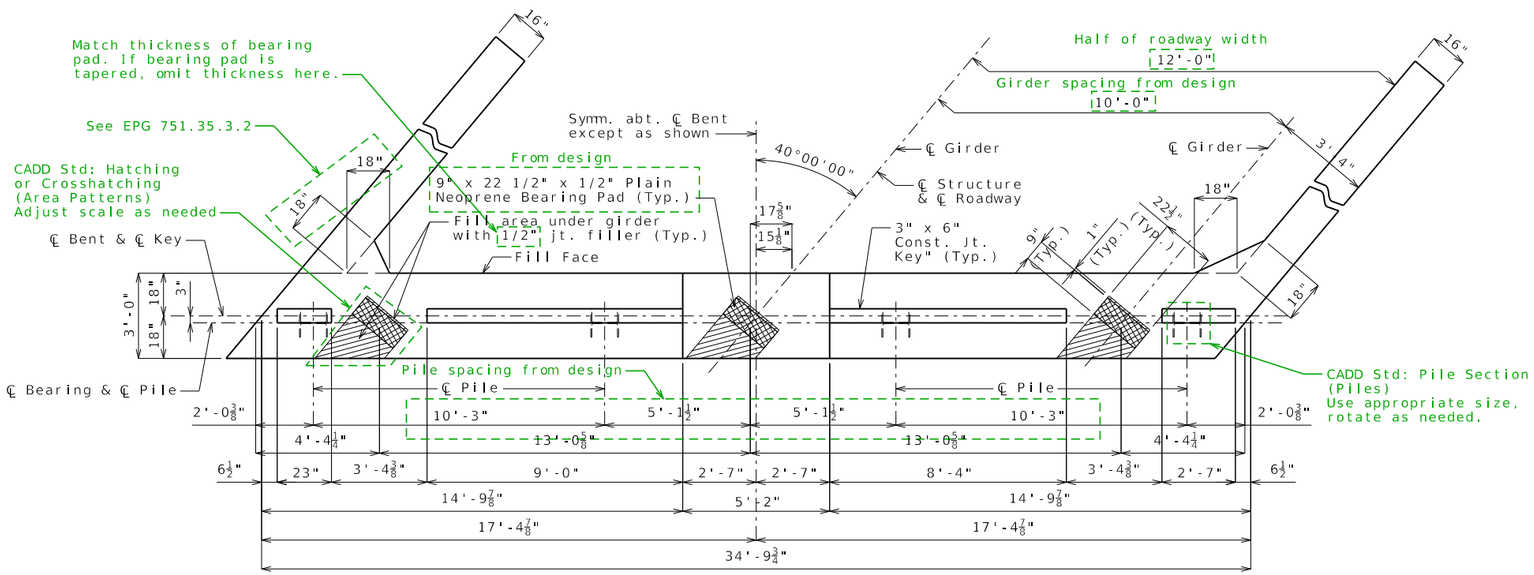

PLAN OF BEAM

CADD Std: Section thru Key for Integral Bent (End Bents)

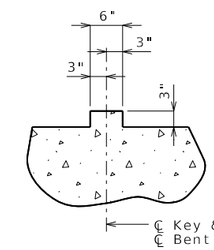

SECTION THRU KEY

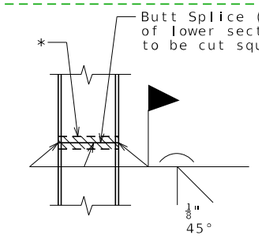

STEEL PILE SPLICE

(If required)

* Galvanizing material shall be omitted or removed one inch clear of weld locations in accordance with Sec 702.

CADD Std: Pile Splice Detail (Piles)

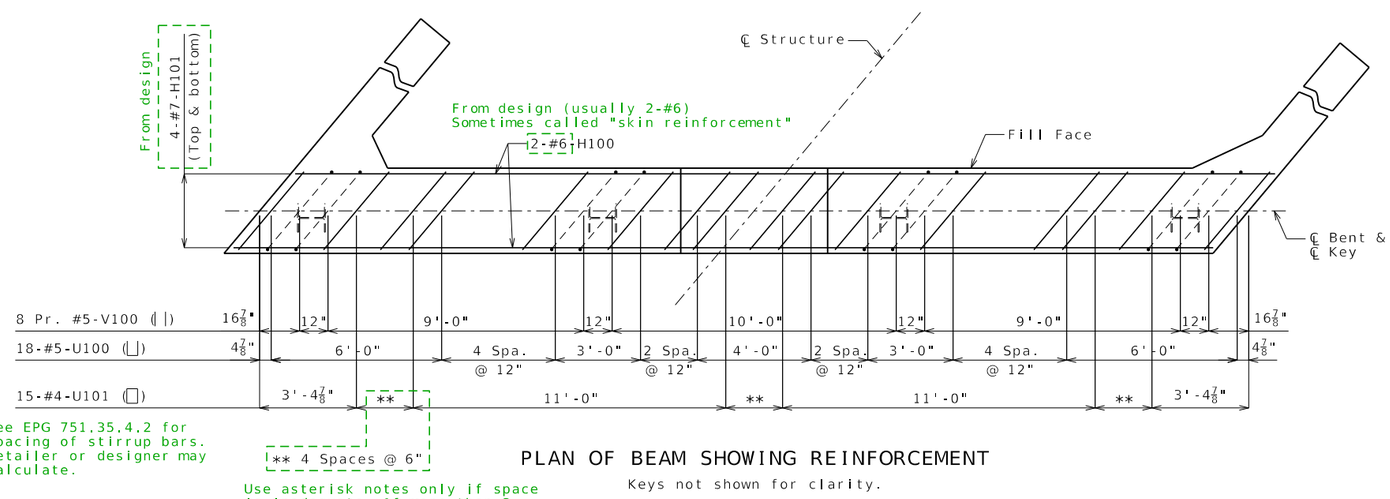

See EPG 751.35.4.2 for spacing of stirrup bars. Detailer or designer may calculate.

** 4 Spaces @ 6"

Use asterisk notes only if space is inadequate. If more than 3 asterisks are needed, use numbers in parentheses instead (e.g. (1), (2), etc.)

PLAN OF BEAM SHOWING REINFORCEMENT

Keys not shown for clarity.

Notes from EPG 751.50

General Notes:

Work this sheet with Sheets No. 4 & 5.

G1.7.1 All U bars and pairs of V bars shall be placed parallel to centerline of roadway.

G1.20 Reinforcing steel shall be shifted to clear piles. U bars shall clear piles by at least 1 1/2 inches.

CADD Std: G4.1, Substructure Quantity (Bridge Detailing Notes)

Substructure Quantity Table for Bent No. 1

Item		Quantity
Class 1 Excavation	cu. yard	40
Galvanized Structural Steel Piles (12 in.)	linear foot	120
Pile Point Reinforcement	each	4
Class B Concrete (Substructure)	cu. yard	16.7

These quantities are included in the estimated quantities table on Sheet No. 2.

Note G4.2, EPG 751.50

DETAILS OF END BENT NO. 1

CADD Std: Large Text (Sheet Titles) (General Annotation)

Detailed Aug. 2019
Checked Aug. 2019

Note: This drawing is not to scale. Follow dimensions.

Sheet No. 3 of

DATE PREPARED	
12/28/2023	
ROUTE	STATE
	MO
DISTRICT	SHEET NO.
BR	3
COUNTY	
JOB NO.	
CONTRACT ID.	
PROJECT NO.	
BRIDGE NO.	
EXAMPLE	

DESCRIPTION

DATE

MISSOURI HIGHWAYS AND TRANSPORTATION COMMISSION

105 WEST CAPITOL
JEFFERSON CITY, MO 65102
1-888-ASK-MODOT (1-888-275-6636)

Example_plans_003_2023_Bt1-1.dgn 1:19:19 PM 12/28/2023

EPG 751.35 Concrete Pile Cap Integral End Bents

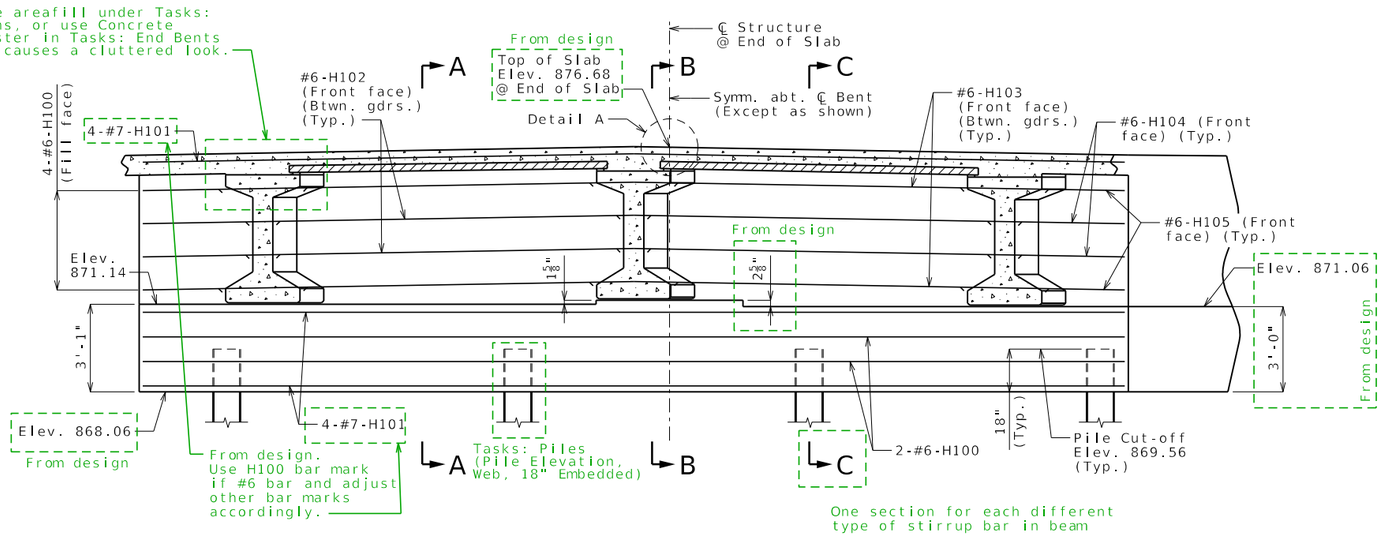

SECTION NEAR END BENT

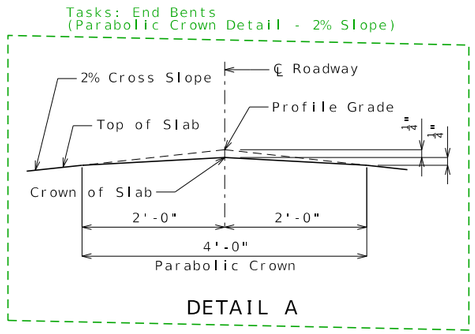

DETAIL A

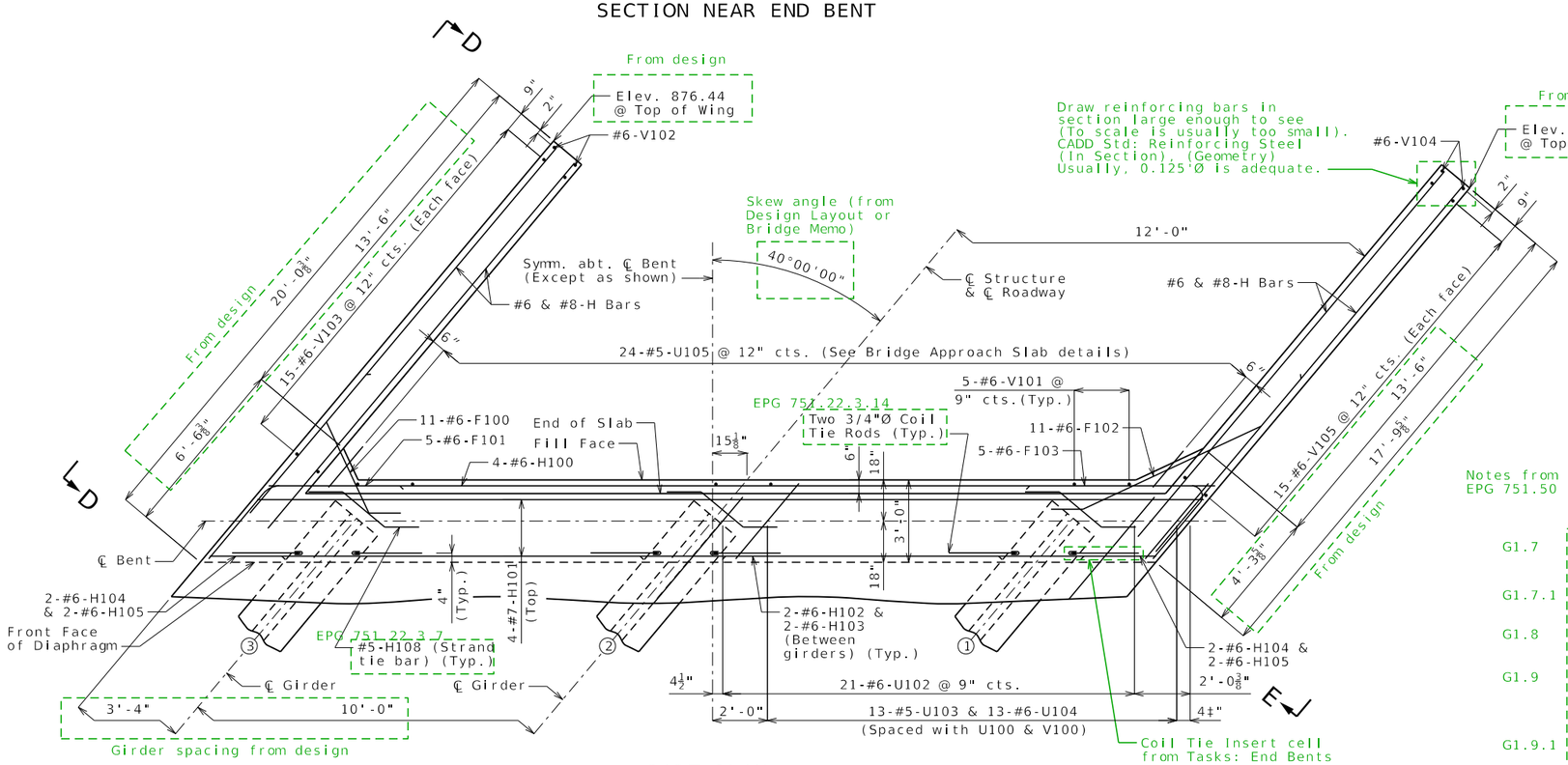

PART PLAN

CADD Std: Section Arrow (End Bents or General Annotation)

General Notes:

Notes from EPG 751.50

Work this sheet with Sheets No. 3 & 5.

For Sections A-A, B-B & C-C and Elevations D-D & E-E, see Sheet No. 5.

G1.7	The #6-F100 and #6-F102 bars shall be bent in the field to clear girders.
G1.7.1	The U bars shall be placed parallel to centerline of roadway.
G1.8	All concrete in the end bent above top of beam and below top of slab shall be Class B-2.
G1.9	Strands at end of girders shall be field bent or, if necessary, cut in field to maintain 1 1/2-inch minimum clearance to fill face of end bent.
G1.9.1	For location of coil tie rods and #5-H108 (strand tie bar), see Sheet No. 14.
G1.25	For details of vertical drain at end bents, see Sheet No. 6.
G1.30	For details of bridge approach slab, see Sheet No. 26.

DETAILS OF END BENT NO. 1

Detailed Aug. 2019
Checked Aug. 2019

Note: This drawing is not to scale. Follow dimensions.

DATE PREPARED	
12/28/2023	
ROUTE	STATE MO
DISTRICT BR	SHEET NO. 4
COUNTY	
JOB NO.	
CONTRACT ID.	
PROJECT NO.	
BRIDGE NO. EXAMPLE	

DESCRIPTION | DATE

MISSOURI HIGHWAYS AND TRANSPORTATION COMMISSION
105 WEST CAPITOL
JEFFERSON CITY, MO 65102
1-888-ASK-MODOT (1-888-275-6636)

EPG 751.35 Concrete Pile Cap Integral End Bents

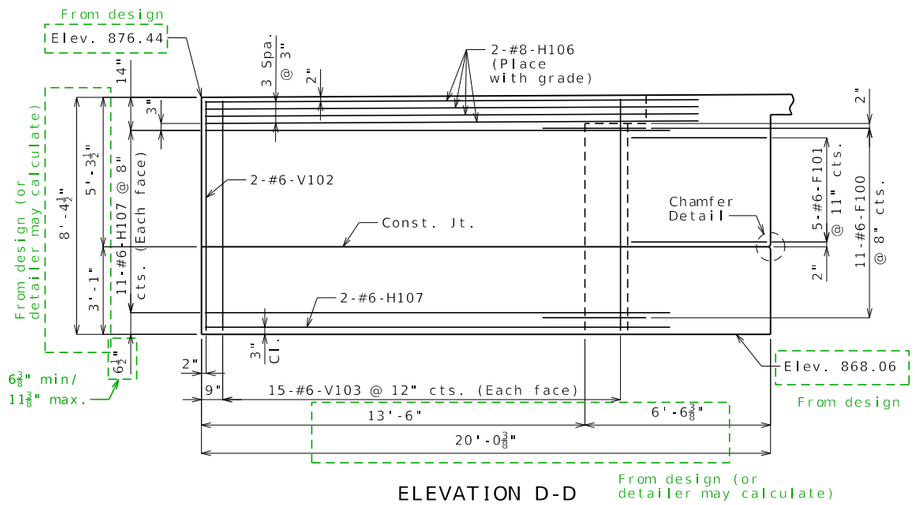

ELEVATION D-D

CADD Std: Typical Section thru Wing (End Bents) See EPG 751.35.4.3

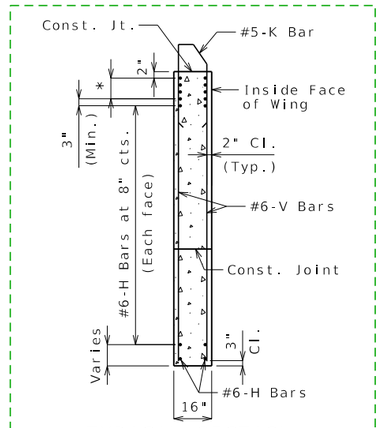

TYPICAL SECTION THRU WING

* #8-H Bars at 3" cts. (Each face)(Place with grade)

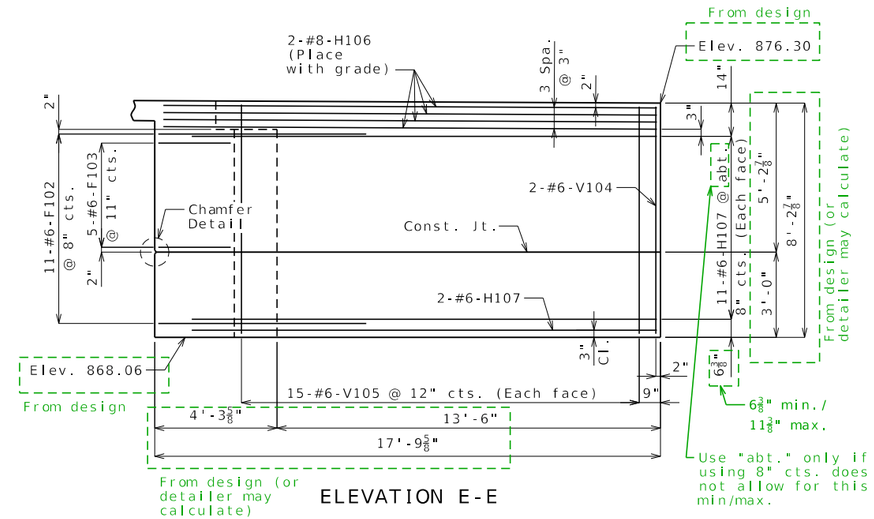

ELEVATION E-E

CADD Std: Chamfer Detail (End Bents) See EPG 751.35.3.4

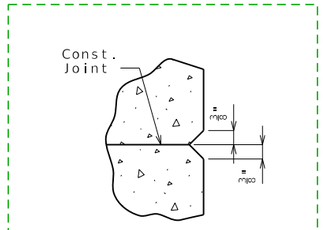

CHAMFER DETAIL

CADD Std: Dim at CL Rdwy Bracket (End Bents)

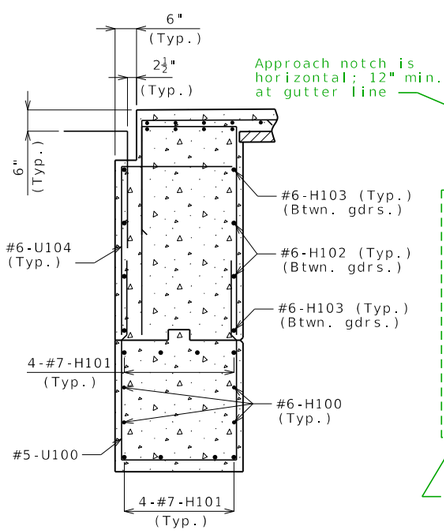

SECTION A-A

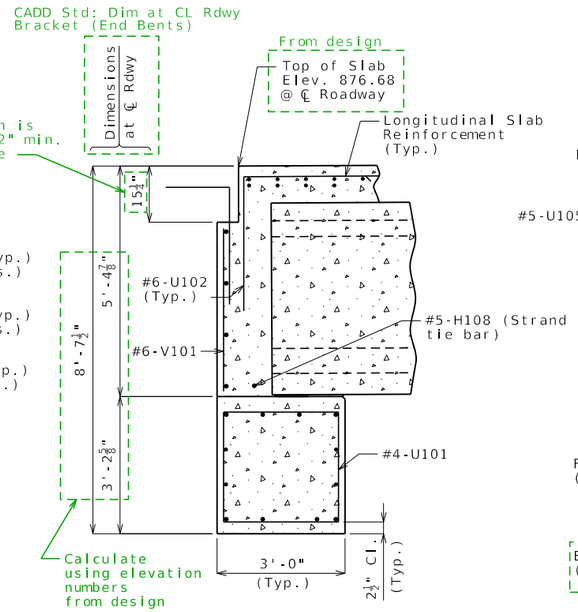

SECTION B-B

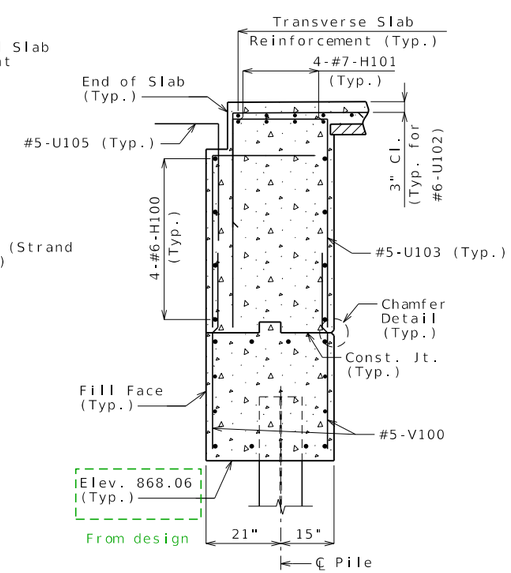

SECTION C-C

General Notes:

Work this sheet with Sheets No. 3 & 4.

EPG 751.50 Note G1.6 For reinforcement of the barrier, see Sheet No. 24.

DETAILS OF END BENT NO. 1

Detailed Aug. 2019
Checked Aug. 2019

Note: This drawing is not to scale. Follow dimensions.

Sheet No. 5 of

DATE PREPARED	
12/28/2023	
ROUTE	STATE
	MO
DISTRICT	SHEET NO.
BR	5
COUNTY	
JOB NO.	
CONTRACT ID.	
PROJECT NO.	
BRIDGE NO.	
EXAMPLE	

DESCRIPTION

DATE

MISSOURI HIGHWAYS AND TRANSPORTATION COMMISSION
105 WEST CAPITOL
JEFFERSON CITY, MO 65102
1-888-ASK-MODOT (1-888-275-6636)

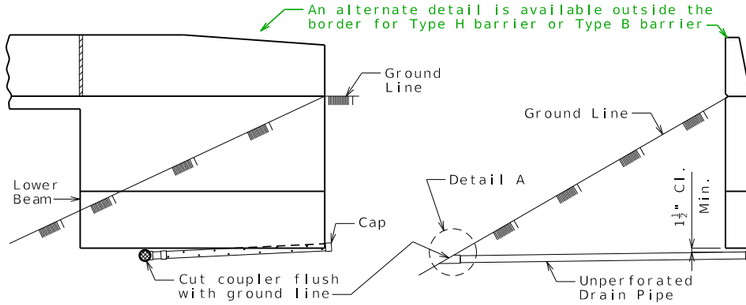

ELEVATION OF WING

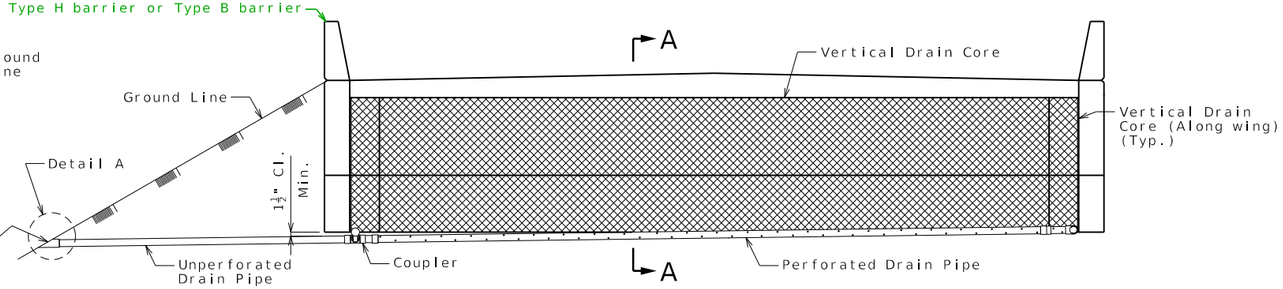

ELEVATION OF END BENT

Use current standard sheet, found in ProjectWise under Bridge/Br_Std_Dwgs/Drains/VDRA/Current

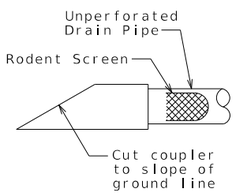

DETAIL A

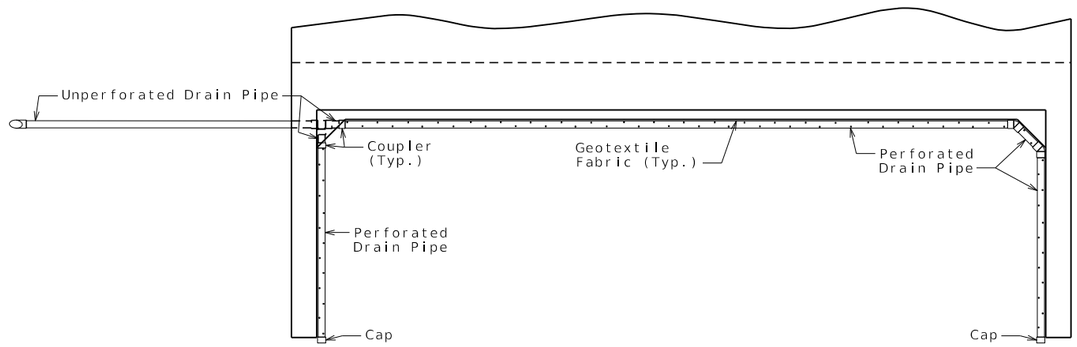

PLAN OF END BENT

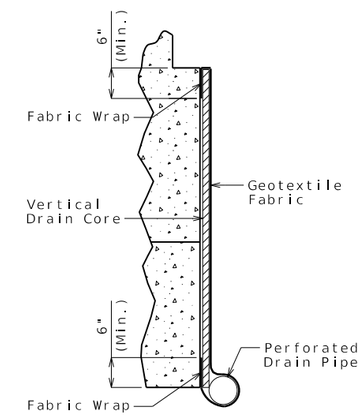

PART SECTION A-A
(Section thru wing similar)

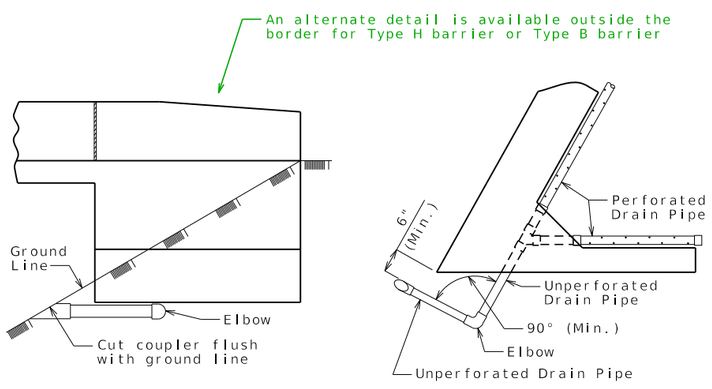

ELEVATION OF WING PART PLAN

OPTIONAL TURNED DRAIN
(Use only when straight drain is not practical.)

General Notes:

All drain pipe shall be sloped 1 to 2 percent.

Drain pipe may be either 6-inch diameter corrugated metallic-coated steel pipe underdrain, 4-inch diameter corrugated polyvinyl chloride (PVC) drain pipe, or 4-inch diameter corrugated polyethylene (PE) drain pipe.

Drain pipe shall be placed at fill face of end bent and inside face of wings. The pipe shall slope to lowest grade of ground line, also missing the lower beam of end bent by a minimum of 1 1/2 inches.

Perforated pipe shall be placed at fill face side and inside face of wings at the bottom of end bent and plain pipe shall be used where the vertical drain ends to the exit at ground line.

VERTICAL DRAIN AT END BENTS

(Squared end bent shown, skewed end bent similar)

Detailed May 2023
Checked May 2023

Note: This drawing is not to scale. Follow dimensions.

DATE PREPARED	5/9/2023
ROUTE	STATE MO
DISTRICT BR	SHEET NO. 6
COUNTY	
JOB NO.	
CONTRACT ID.	
PROJECT NO.	
BRIDGE NO.	EXAMPLE

DESCRIPTION | DATE

MISSOURI HIGHWAYS AND TRANSPORTATION COMMISSION
105 WEST CAPITOL
JEFFERSON CITY, MO 65102
1-888-ASK-MODOT (1-888-275-6636)

IF A SEAL IS PRESENT ON THIS SHEET IT HAS BEEN ELECTRONICALLY SEALED AND DATED.

EPG 751.31 Open Concrete Intermediate Bents
EPG 751.37 Drilled Shafts

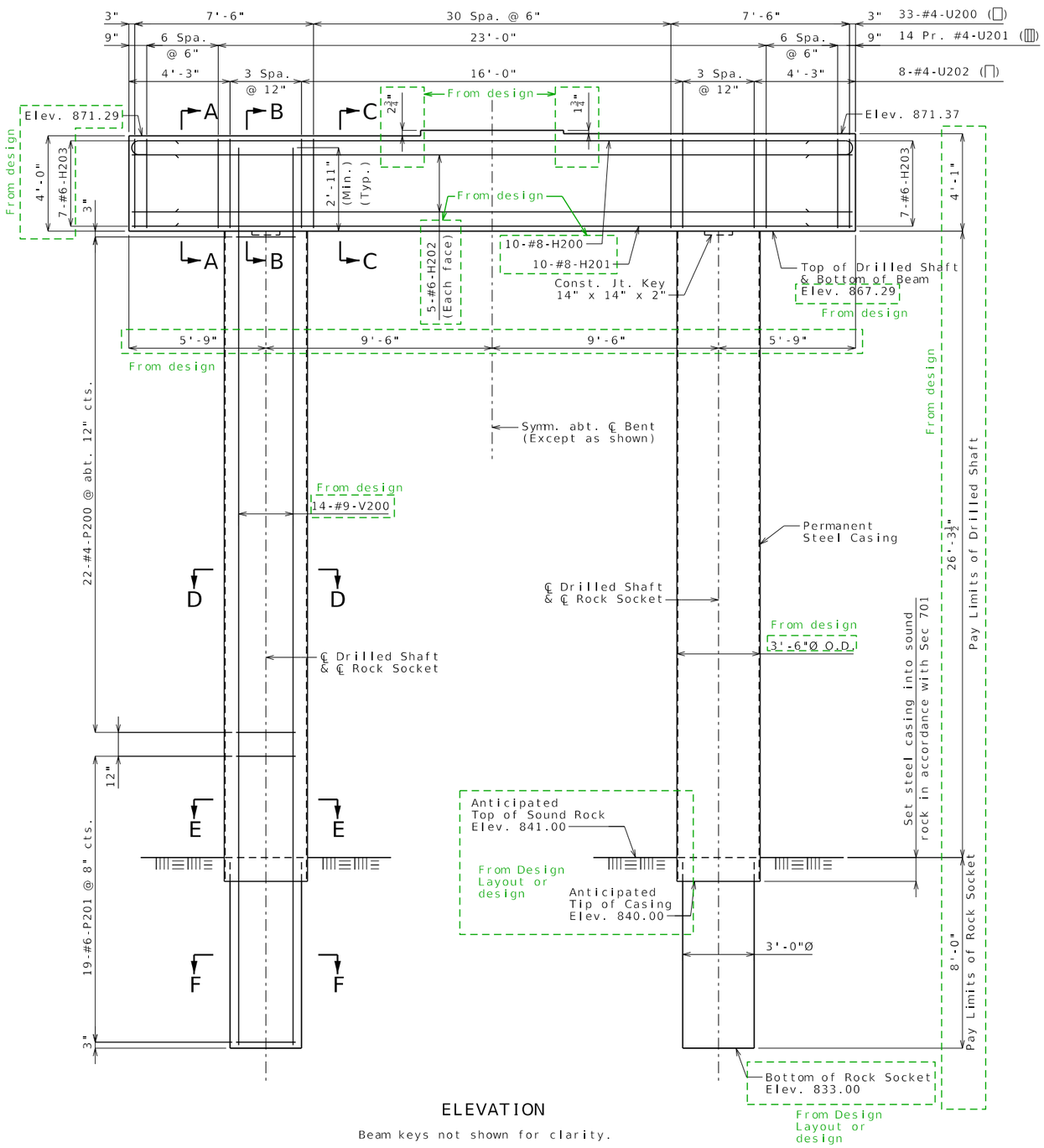

ELEVATION

Beam keys not shown for clarity.

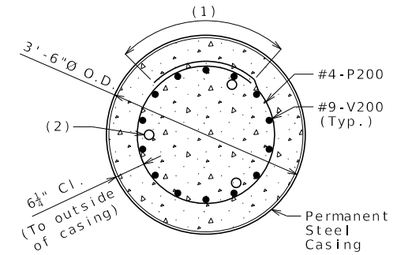

SECTION D-D

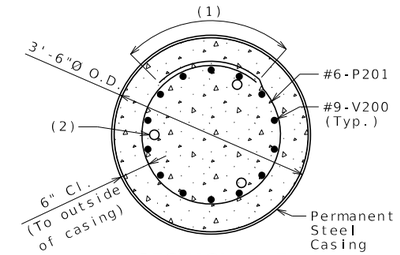

SECTION E-E

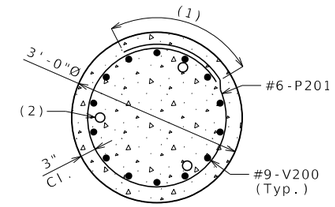

SECTION F-F

(1) 2'-1" Min. Lap (#4-P200)
3'-1" Min. Lap (#6-P201)
(Stagger adjacent bar splices)

(2) 2"Ø Steel Pipe for sonic logging testing (3 each shaft)

Laminated bearing pad dimensions from design. See EPG 751.11.2.1 (Taper). Detailer draws this. Detail is not required for "Plain" bearing pads.

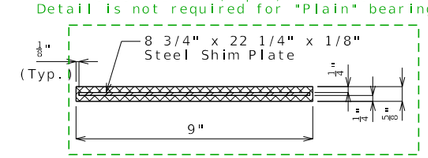

SECTION THRU LAMINATED NEOPRENE BEARING PAD

It is preferred that Key and Bearing Pad details are shown on the same sheet as the Plan of Beam if space allows.

CADD Std: Section thru Key for Intermediate Bent (Intermediate Bents)

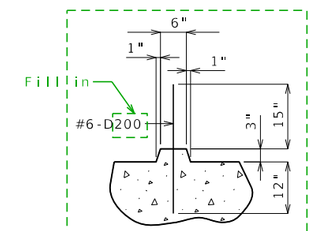

SECTION THRU KEY

CADD Std: G4.1 Substructure Quantities (Detailing Notes)

Substructure Quantity Table for Bent No. 2		
Item		Quantity
Drilled Shafts (3 ft. 6 in. Dia.)	linear foot	53
Rock Sockets (3 ft. 0 in. Dia.)	linear foot	16
Video Camera Inspection	each	2
Foundation Inspection Holes	linear foot	36
Sonic Logging Testing	each	2
Class B Concrete (Substructure)	cu. yard	18.5
Reinforcing Steel (Bridges)	pound	7,820

Notes from EPG 751.50

G4.2 These quantities are included in the estimated quantities table on Sheet No. 2.

G4.3 All reinforcement in drilled shafts and rock sockets is included in the substructure quantities.

General Notes:
Work this sheet with Sheet No. 8.

G8.1 Thickness of permanent steel casing shall be in accordance with Sec 701.

G8.2 An additional 4 feet has been added to V-bar lengths and additional 12-#6-P201 bars have been added for possible change in drilled shaft or rock socket length. The additional V-bar length shall be cut off or included in the reinforcement lap if not required. The P bars shall be spaced similarly to that shown in Elevation, if required, or a lesser spacing if not required but not less than 6-inch centers.

G8.3 Sonic logging testing shall be performed on all drilled shafts and rock sockets.

DETAILS OF INTERMEDIATE BENT NO. 2

Detailed Aug. 2019
Checked Aug. 2019

Note: This drawing is not to scale. Follow dimensions.

Sheet No. 7 of

DATE PREPARED	5/9/2023
ROUTE	STATE MO
DISTRICT BR	SHEET NO. 7
COUNTY	
JOB NO.	
CONTRACT ID.	
PROJECT NO.	
BRIDGE NO.	EXAMPLE

DESCRIPTION

DATE

MISSOURI HIGHWAYS AND TRANSPORTATION COMMISSION
105 WEST CAPITOL
JEFFERSON CITY, MO 65102
1-888-ASK-MODOT (1-888-275-6636)

IF A SEAL IS PRESENT ON THIS SHEET IT HAS BEEN ELECTRONICALLY SEALED AND DATED.

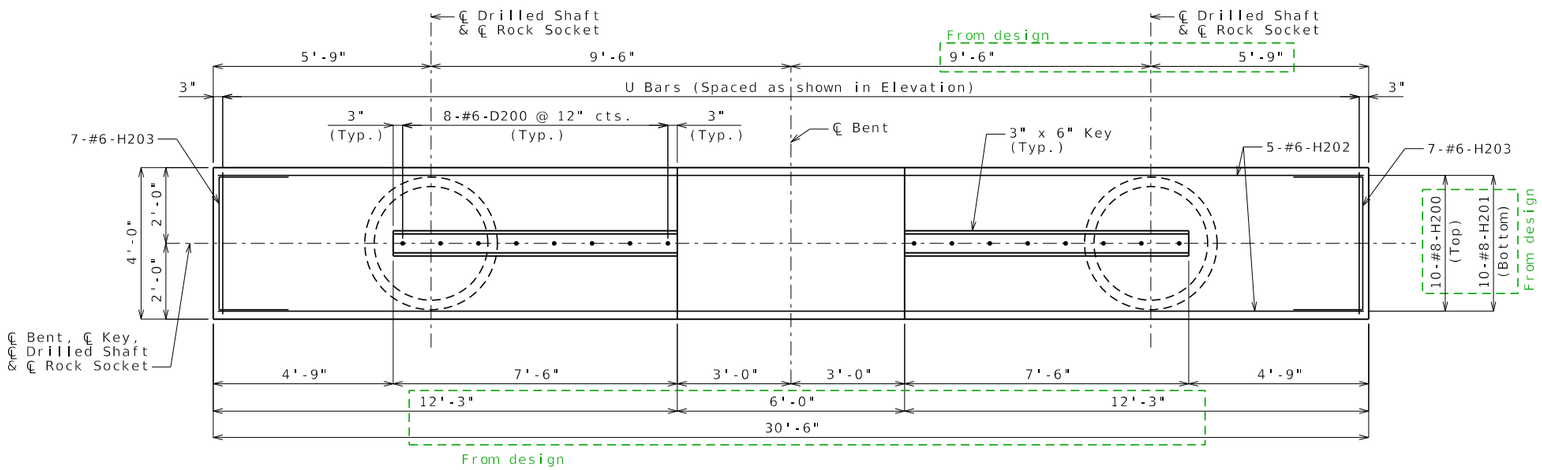

PLAN SHOWING REINFORCEMENT

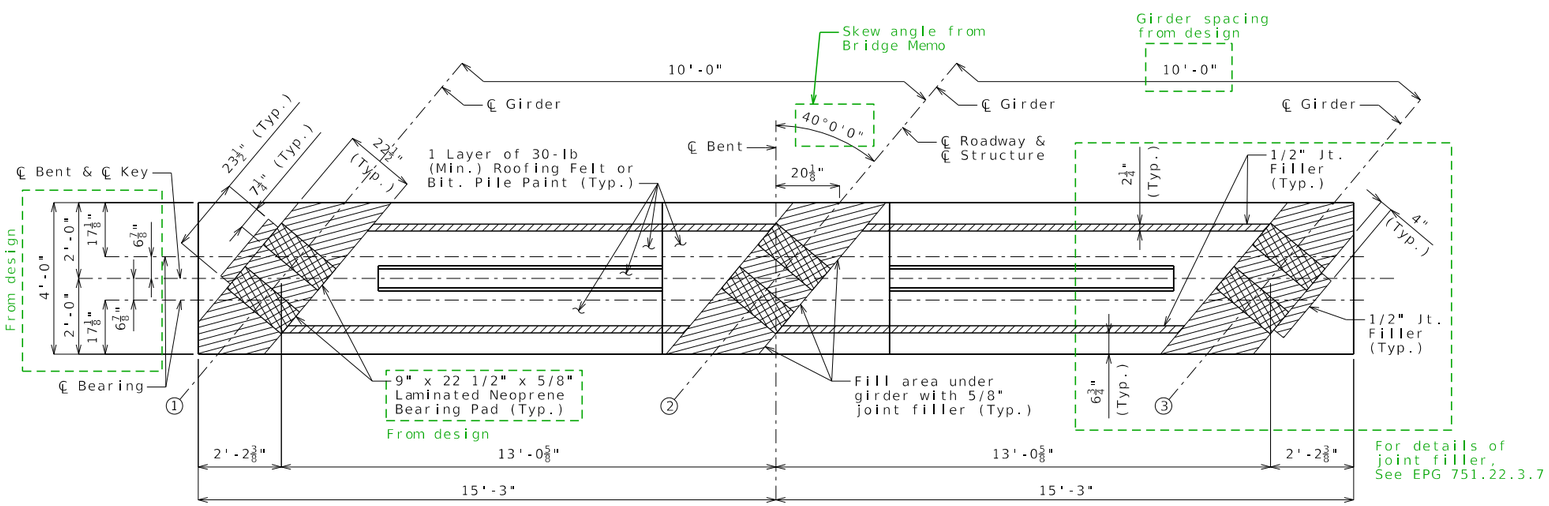

PLAN OF BEAM

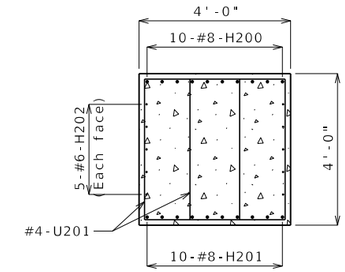

SECTION A-A

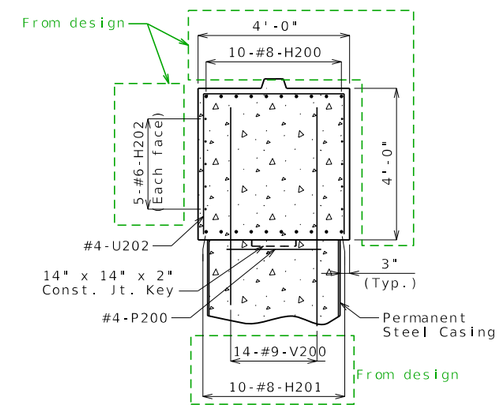

SECTION B-B

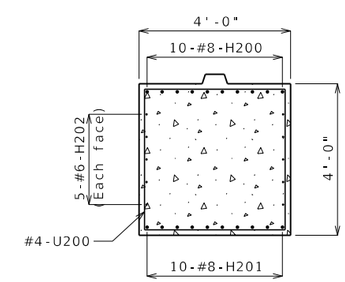

SECTION C-C

General Notes:

Work this sheet with Sheet No. 7.

Note G1.40, EPG 751.50 For steps 2 inches or more, use 2 1/4 x 1/2-inch joint filler up vertical face.

DETAILS OF INTERMEDIATE BENT NO. 2

Detailed Aug. 2019
Checked Aug. 2019

Note: This drawing is not to scale. Follow dimensions.

DATE PREPARED	5/9/2023
ROUTE	STATE MO
DISTRICT BR	SHEET NO. 8
COUNTY	
JOB NO.	
CONTRACT ID.	
PROJECT NO.	
BRIDGE NO.	EXAMPLE

DESCRIPTION

DATE

MISSOURI HIGHWAYS AND TRANSPORTATION COMMISSION
105 WEST CAPITOL
JEFFERSON CITY, MO 65102
1-888-ASK-MODOT (1-888-275-6636)

Example plans for Int. Bent No. 3 were taken from a different structure than the rest of the example plans. Therefore, some details may not match information shown on other sheets.

EPG 751.32.3 Concrete Pile Cap Intermediate Bents

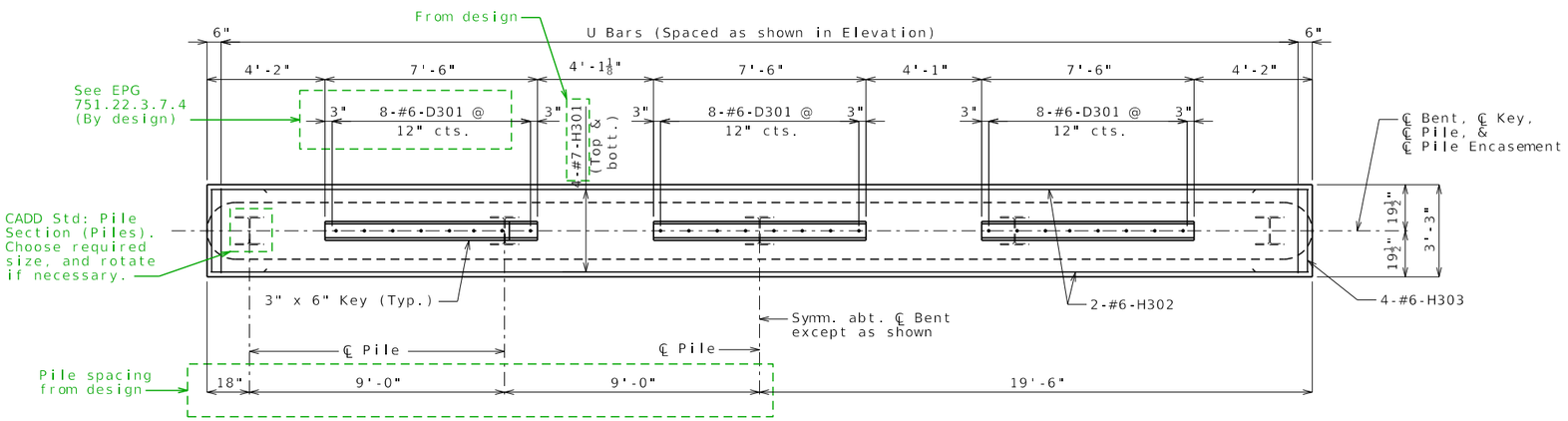

PLAN SHOWING REINFORCEMENT

CADD Std: Section thru Key for Intermediate Bent (Intermediate Bents)

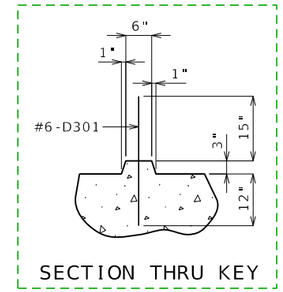

Bearing dimensions from design. See EPG 751.11.2.1 (Taper) Detailer draws this detail. Detail not required for "plain" neoprene pads.

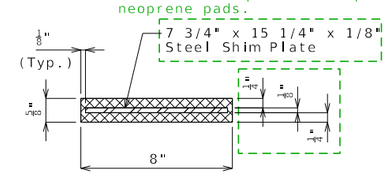

SECTION THRU LAMINATED NEOPRENE BEARING PAD

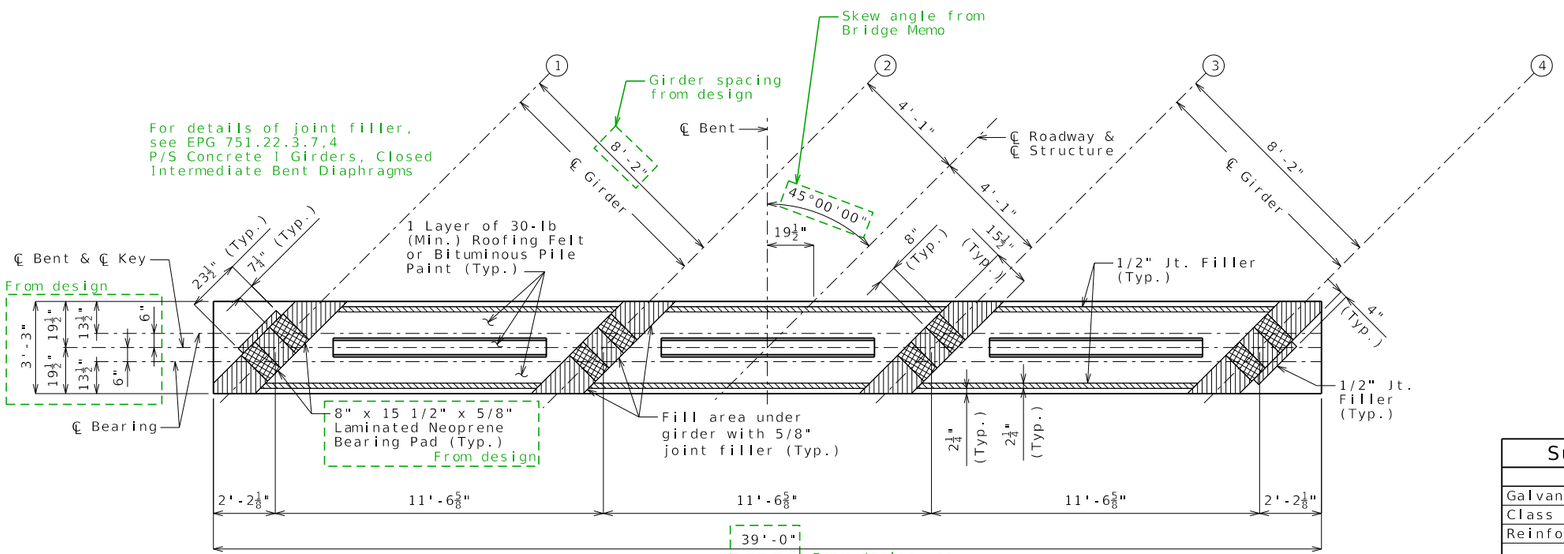

PLAN OF BEAM

CADD Std: G4.1 Substructure Quantities (Detailing Notes)

Substructure Quantity Table for Bent No. 3		
Item		Quantity
Galvanized Structural Steel Piles (12 in.)	linear foot	x
Class B Concrete (Substructure)	cu. yard	x
Reinforcing Steel (Bridges)	pound	x

Note G4.2, EPG 751.50

These quantities are included in the estimated quantities table on Sheet No. 2.

Note: Work this sheet with Sheet No. 10.

DETAILS OF INTERMEDIATE BENT NO. 3

Detailed Aug. 2019
Checked Aug. 2019

Note: This drawing is not to scale. Follow dimensions.

DATE PREPARED	
5/9/2023	
ROUTE	STATE MO
DISTRICT BR	SHEET NO. 9
COUNTY	
JOB NO.	
CONTRACT ID.	
PROJECT NO.	
BRIDGE NO. EXAMPLE	

DESCRIPTION

DATE

MISSOURI HIGHWAYS AND TRANSPORTATION COMMISSION

105 WEST CAPITOL
JEFFERSON CITY, MO 65102
1-888-ASK-MODOT (1-888-275-6636)

IF A SEAL IS PRESENT ON THIS SHEET IT HAS BEEN ELECTRONICALLY SEALED AND DATED.

EPG 751.32 Concrete Pile Cap Intermediate Bents

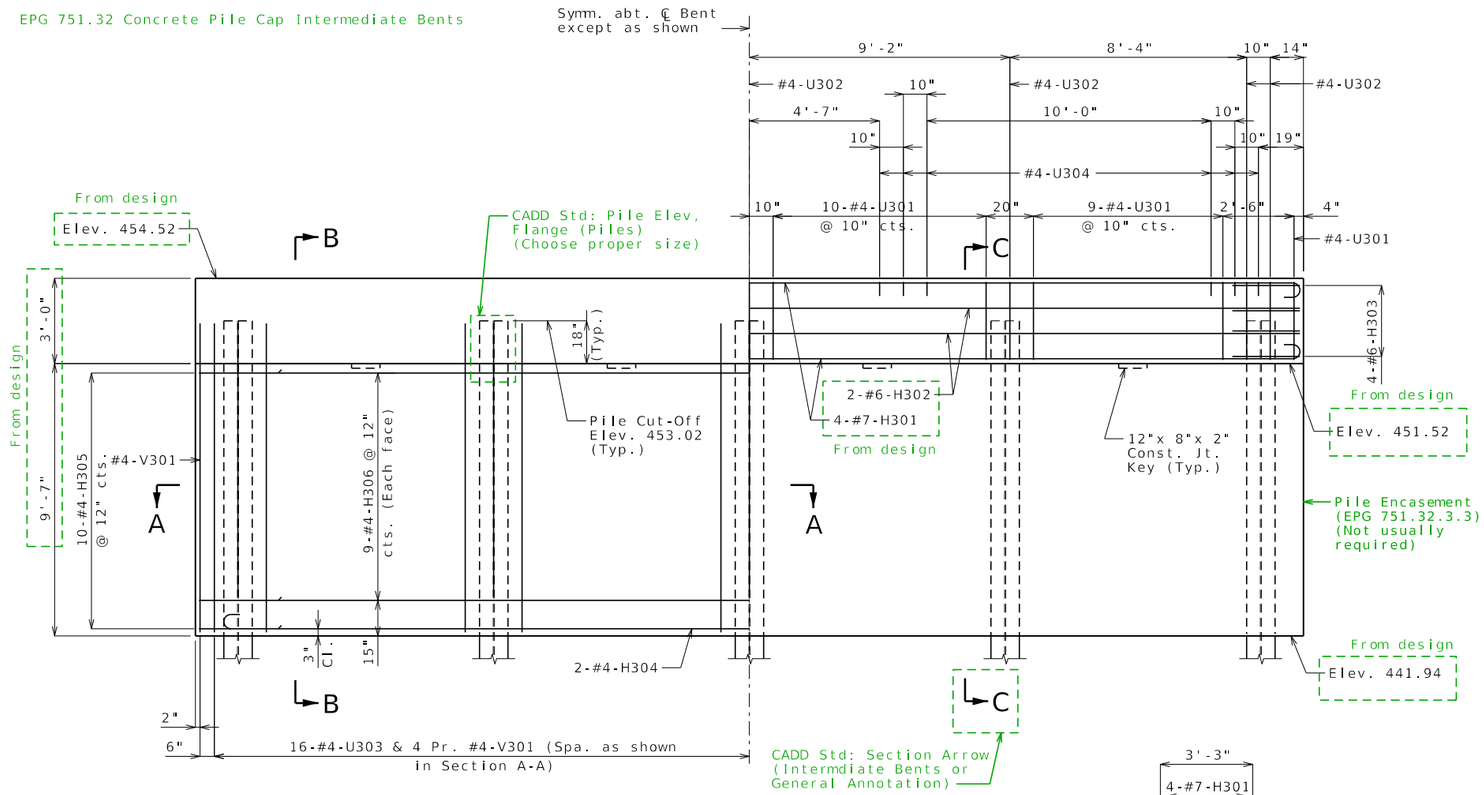

ELEVATION

CADD Std: Pile Splice Detail - Galvanized (Piles)

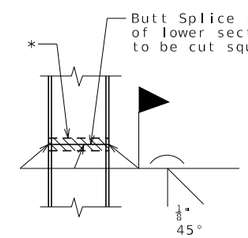

STEEL PILE SPLICE

(If required)

* Galvanizing material shall be omitted or removed one inch clear of weld locations in accordance with Sec 702.

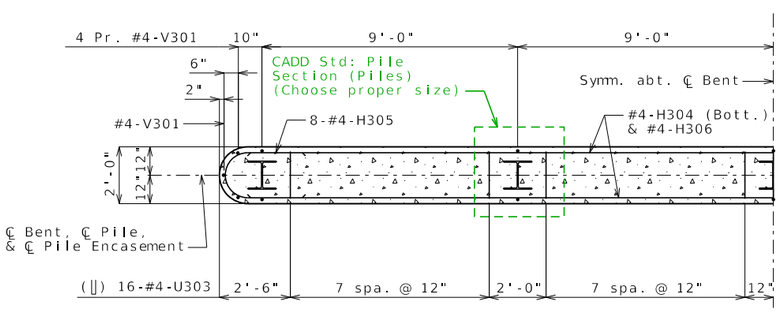

SECTION A-A

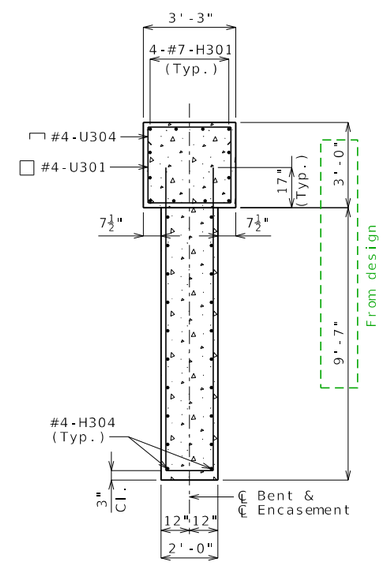

SECTION B-B

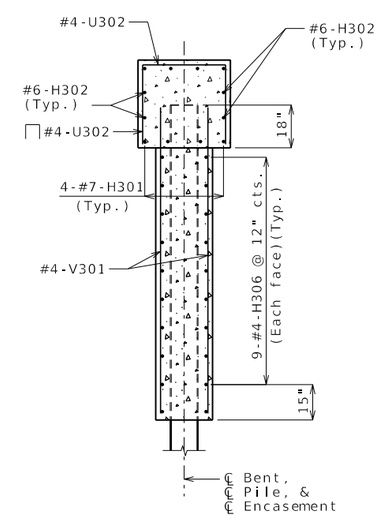

SECTION C-C

DETAILS OF INTERMEDIATE BENT NO. 3

Note: Work this sheet with Sheet No. 9.

Detailed Aug. 2019
Checked Aug. 2019

Note: This drawing is not to scale. Follow dimensions.

DATE PREPARED	5/9/2023
ROUTE	STATE MO
DISTRICT BR	SHEET NO. 10
COUNTY	
JOB NO.	
CONTRACT ID.	
PROJECT NO.	
BRIDGE NO.	EXAMPLE

DESCRIPTION

DATE

MISSOURI HIGHWAYS AND TRANSPORTATION COMMISSION
105 WEST CAPITOL
JEFFERSON CITY, MO 65102
1-888-ASK-MODOT (1-888-275-6636)

See notations for End Bent No. 1.

The second end bent may not be the same as End Bent No. 1, especially if the bridge is curved. See design.

If both end bents are the same, they may be combined (showing "End Bents No. 1 & 4"), with a separate substructure quantities box for each bent, and some double dimensions if necessary (e.g. top of wing elevations, vertical wing dimensions, etc.).

Other sheets showing End Bent No. 4 have been left out of these Example Plans for brevity.

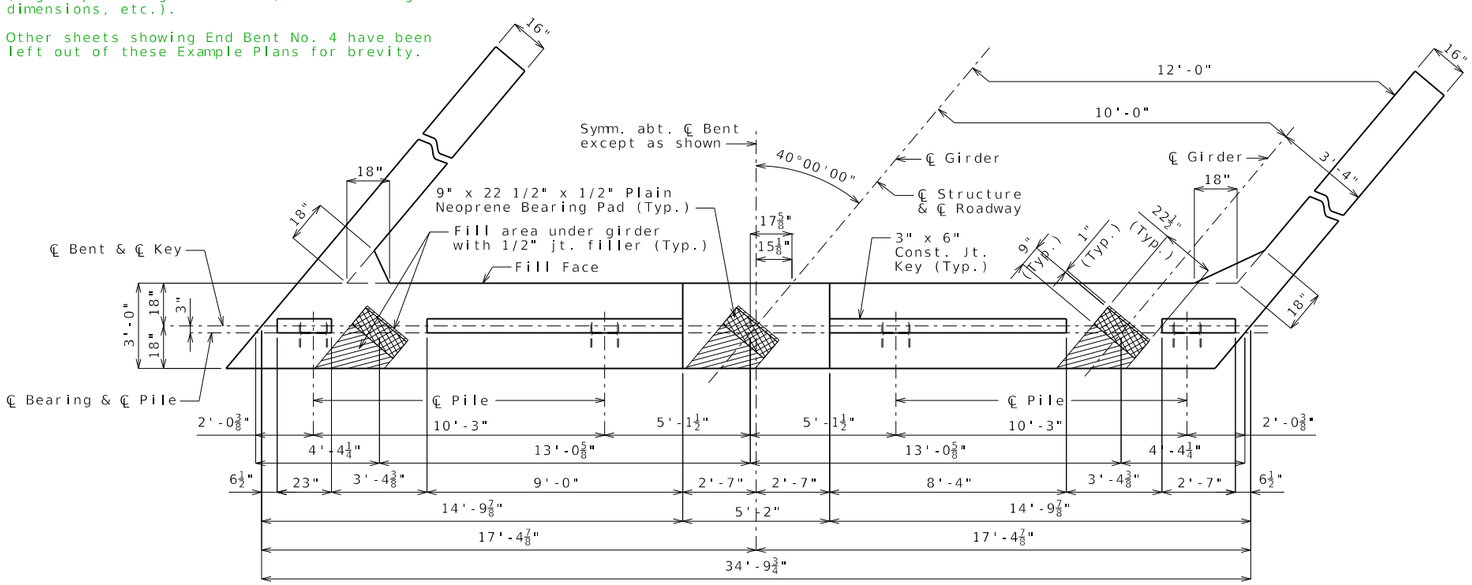

PLAN OF BEAM

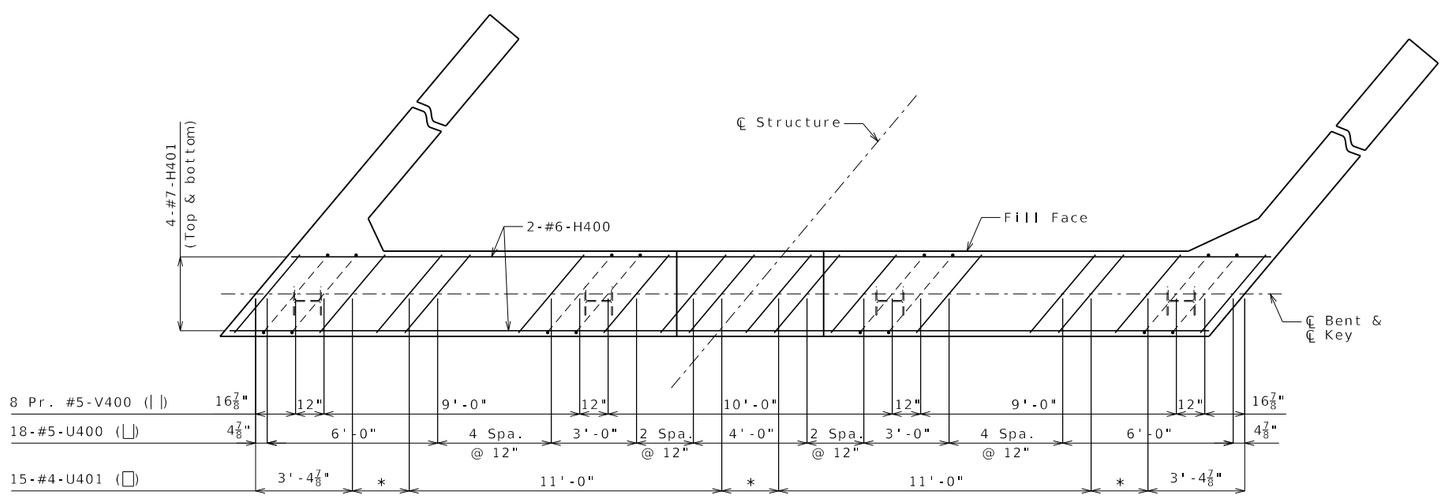

PLAN OF BEAM SHOWING REINFORCEMENT

Keys not shown for clarity.

* 4 Spaces @ 6"

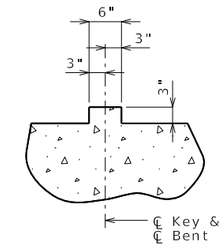

SECTION THRU KEY

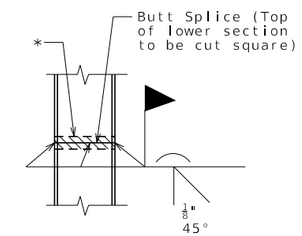

STEEL PILE SPLICE

(If required)

* Galvanizing material shall be omitted or removed one inch clear of weld locations in accordance with Sec 702.

Notes:

Work this sheet with Sheets No. 12 & 13.

All U bars and pairs of V bars shall be placed parallel to centerline of roadway.

Reinforcing steel shall be shifted to clear piles. U bars shall clear piles by at least 1 1/2 inches.

Substructure Quantity Table for Bent No. 4		
Item		Quantity
Class 1 Excavation	cu. yard	40
Galvanized Structural Steel Piles (12 in.)	linear foot	120
Pile Point Reinforcement	each	4
Class B Concrete (Substructure)	cu. yard	16.7

These quantities are included in the estimated quantities table on Sheet No. 2.

DETAILS OF END BENT NO. 4

Detailed Aug. 2019
Checked Aug. 2019

Note: This drawing is not to scale. Follow dimensions.

DATE PREPARED	
12/28/2023	
ROUTE	STATE MO
DISTRICT BR	SHEET NO. 11
COUNTY	
JOB NO.	
CONTRACT ID.	
PROJECT NO.	
BRIDGE NO. EXAMPLE	

DESCRIPTION

DATE

MISSOURI HIGHWAYS AND TRANSPORTATION COMMISSION
105 WEST CAPITOL
JEFFERSON CITY, MO 65102
1-888-ASK-MODOT (1-888-275-6636)

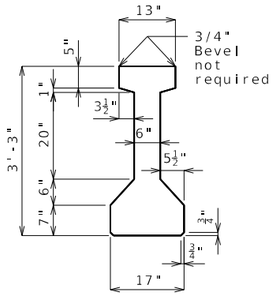

DIMENSIONS

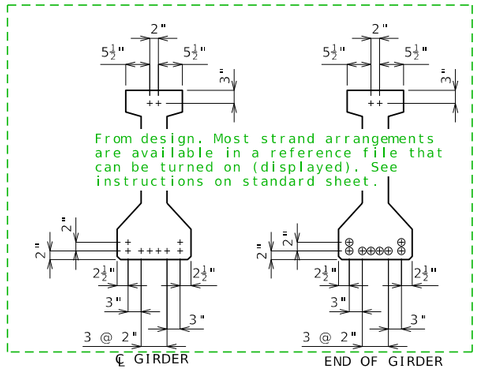

STRAND ARRANGEMENT

+ Indicates prestressing strand.

○ Indicates cut & shop bend with 2'-6" projection.

Strand symbol (+) is available in CADD Std: Prestressing Strand (Prestressed Girders)

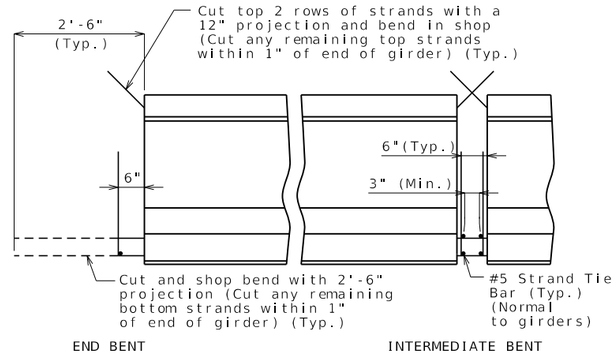

STRANDS AT GIRDER ENDS

Use current standard sheet, found in ProjectWise under Bridge/Br_Std_Dwgs/Prestressed I Girders PSI/Current/ (use appropriate girder type)

EPG 751.22 P/S Concrete I Girders

BILL OF REINFORCING STEEL - EACH GIRDER

NO.	SIZE & MARK	ACTUAL LENGTH	SHAPE	BENDING DIAGRAM
2	6 A1	35'-11"	20	
84	5 B1	4'-8"	11	
16	6 B2	4'-0"	11	
50	4 C1	13"	10	
100	4 D1	2'-5"	9	

From design

Detailer calculates marked values.

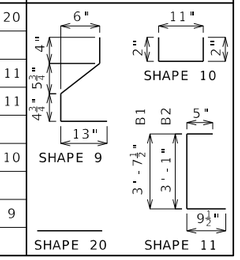

All dimensions are out to out.

Hooks and bends shall be in accordance with the CRSI Manual of Standard Practice for Detailing Reinforced Concrete Structures, Stirrup and Tie Dimensions.

Actual lengths are measured along centerline of bar to the nearest inch.

Minimum clearance to reinforcing shall be one inch.

All reinforcement shall be Grade 60.

The two D1 bars may be furnished as one bar at the fabricator's option.

All B1 bars shall be epoxy coated.

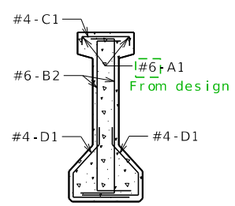

SECTION A-A

Strands not shown for clarity.

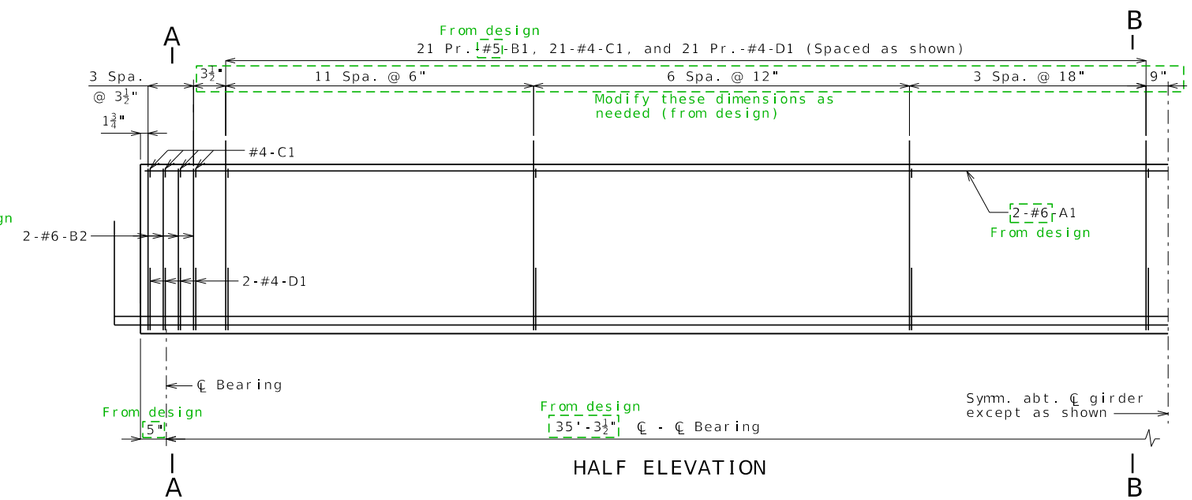

HALF ELEVATION

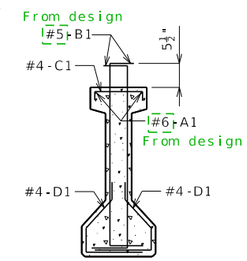

SECTION B-B

Strands not shown for clarity.

For the sake of brevity, only one girder sheet is shown in these Example Plans. There would be another similar sheet for girders in Span (2-3).

General Notes:

Concrete for prestressed girders shall be Class A-1 with f'c = 7000 psi and f'ci = 5000 psi. (From design)

Use 10 strands, 1/2"Ø Grade 270 with an initial prestress force of 310 kips. (From design; See guidance on standard drawing)

Pretensioned members shall be in accordance with Sec 1029.

Fabricator shall be responsible for location and design of lifting devices.

Exterior and interior girders are the same except: coil ties, coil inserts for slab drains, holes for steel intermediate diaphragms.

For Girder Camber Diagram, see Sheet No. .

The 1 1/2"Ø holes shall be cast in the web for steel intermediate diaphragms. Drilling is not allowed. For location of holes and details of steel intermediate diaphragms, see Sheet No. .

For location of coil inserts at slab drains, see Sheet No. .

For location of coil ties at concrete bent diaphragms, see Sheets No. & .

Remove underlined portions of notes if not applicable.

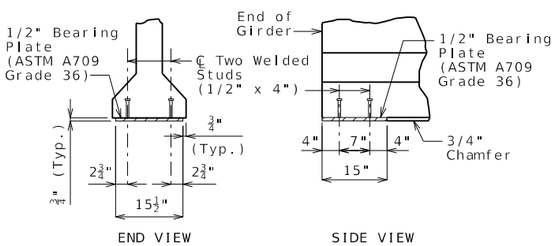

BEARING PLATE

Required for stream crossings only

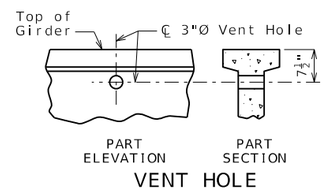

VENT HOLE

Place vent holes at or near upgrade 1/3 point of girders and clear reinforcing steel or strands by 1 1/2" minimum and steel intermediate diaphragm bolt connections by 6" minimum.

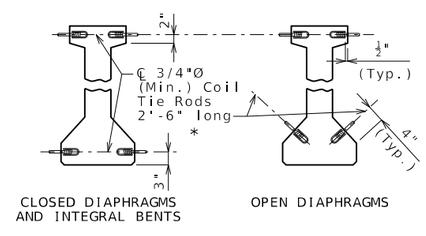

COIL TIES

Exclude coil tie at exterior face of exterior girders except at integral end bents.

* 3'-4" at exterior face of exterior girders at end bents (Detailer calculates. See instructions on std dwg, and EPG 751.35.4.5.)

Omit if B1 bar is larger than #4

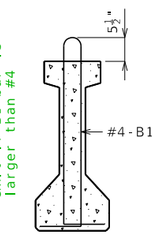

B1 BAR PERMISSIBLE ALTERNATE SHAPE

(Dimension values on this sheet were taken from Bridge A8690)

PRESTRESSED I-GIRDERS - SPANS (1-2) AND (3-4)

Detailed May 2023
Checked May 2023

Note: This drawing is not to scale. Follow dimensions.

DATE PREPARED	12/28/2023
ROUTE	STATE MO
DISTRICT BR	SHEET NO. 12
COUNTY	
JOB NO.	
CONTRACT ID.	
PROJECT NO.	
BRIDGE NO.	EXAMPLE

DESCRIPTION

DATE

MISSOURI HIGHWAYS AND TRANSPORTATION COMMISSION
105 WEST CAPITOL
JEFFERSON CITY, MO 65102
1-888-ASK-MODOT (1-888-275-6636)

See EPG 751.22.3.11 Intermediate Diaphragms

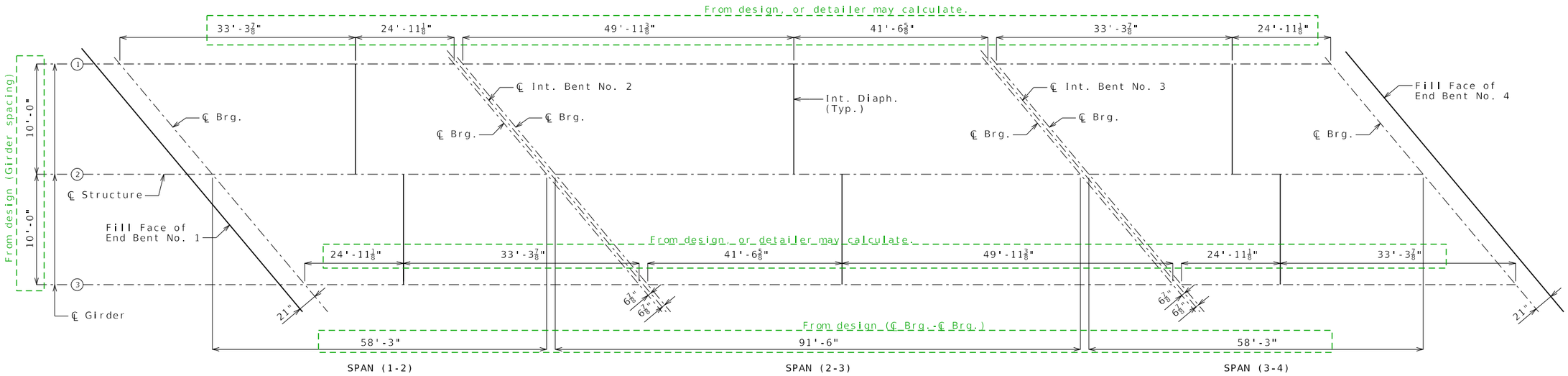

Use current standard sheet, found in ProjectWise under
Bridge/BR_Std_Dwgs/Diaphragms_DIA/Current/
(Use appropriate version for girder type and skew)

Additional guidance is noted on the standard drawing.

PLAN SHOWING LOCATION OF STEEL INTERMEDIATE DIAPHRAGMS

Longitudinal dimensions are horizontal.

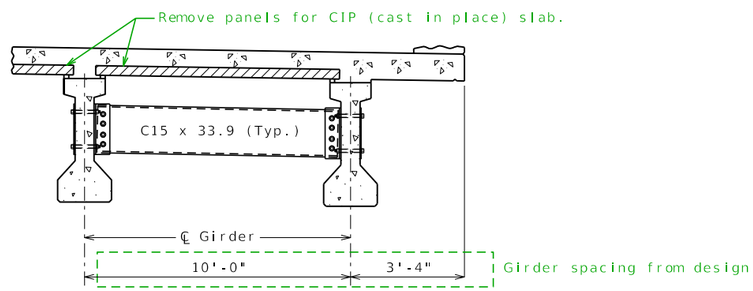

PART SECTION SHOWING INTERMEDIATE DIAPHRAGMS

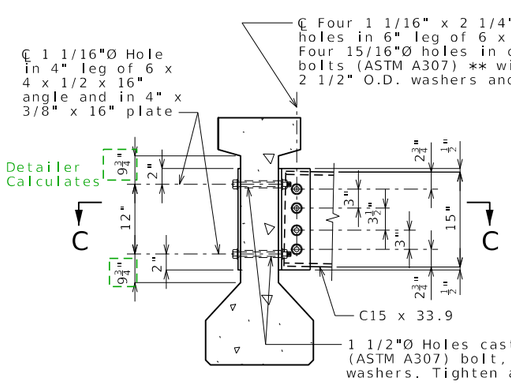

SECTION THRU INT. GIRDER AT DIAPHRAGM

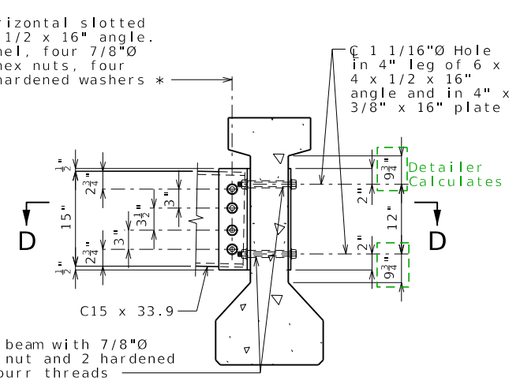

SECTION THRU EXT. GIRDER AT DIAPHRAGM

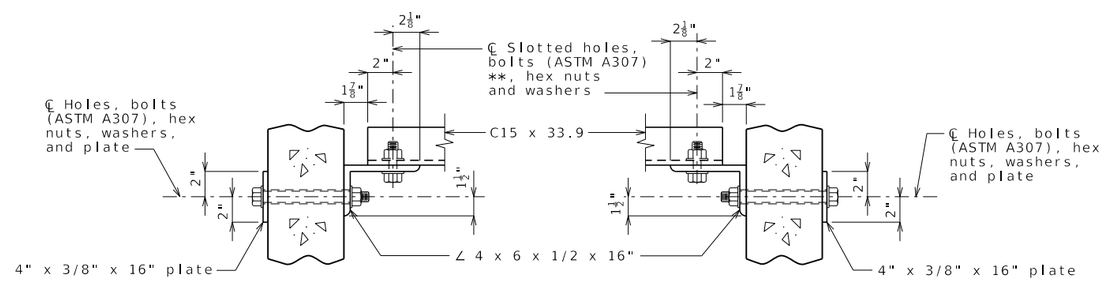

SECTION C-C

SECTION D-D

STEEL DIAPHRAGM NOTES:

* In lieu of 2 1/2" outside diameter washers, contractor may substitute a 3/16" (Min. thickness) plate with four 15/16"Ø holes and one hardened washer per bolt.

** Bolts shall be tightened to provide a tension of one-half that specified in Sec 712 for high strength bolt installation. ASTM F3125 Grade A325 Type 1 bolts may be substituted for and installed in accordance with the requirements for the specified ASTM A307 bolts.

All diaphragm materials including bolts, nuts, and washers shall be galvanized.

Fabricated structural steel shall be ASTM A709 Grade 36 except as noted.

Payment for furnishing and installing steel intermediate diaphragms will be considered completely covered by the contract unit price for Steel Intermediate Diaphragm for P/S Concrete Girders.

Shop drawings will not be required for steel intermediate diaphragms and angle connections.

For location of intermediate diaphragms, see Sheet No. .

Remove this note if Plan Showing Location of Steel Intermediate Diaphragms is on this sheet. (Due to space limitations, it may be shown on the following sheet.)

STEEL INTERMEDIATE DIAPHRAGMS

Detailed July 2020
Checked July 2020

Note: This drawing is not to scale. Follow dimensions.

DATE PREPARED	
12/28/2023	
ROUTE	STATE MO
DISTRICT BR	SHEET NO. 13
COUNTY	
JOB NO.	
CONTRACT ID.	
PROJECT NO.	
BRIDGE NO. EXAMPLE	

DESCRIPTION

DATE

MISSOURI HIGHWAYS AND TRANSPORTATION COMMISSION
105 WEST CAPITOL
JEFFERSON CITY, MO 65102
1-888-ASK-MODOT (1-888-275-6636)

See EPG 751.22.3.7
Closed Concrete Intermediate Diaphragms

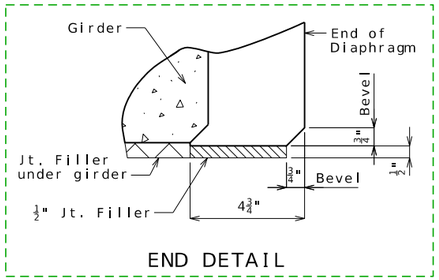

CADD Std: End Detail (Closed at I-Girders)
(Concrete Diaphragms)

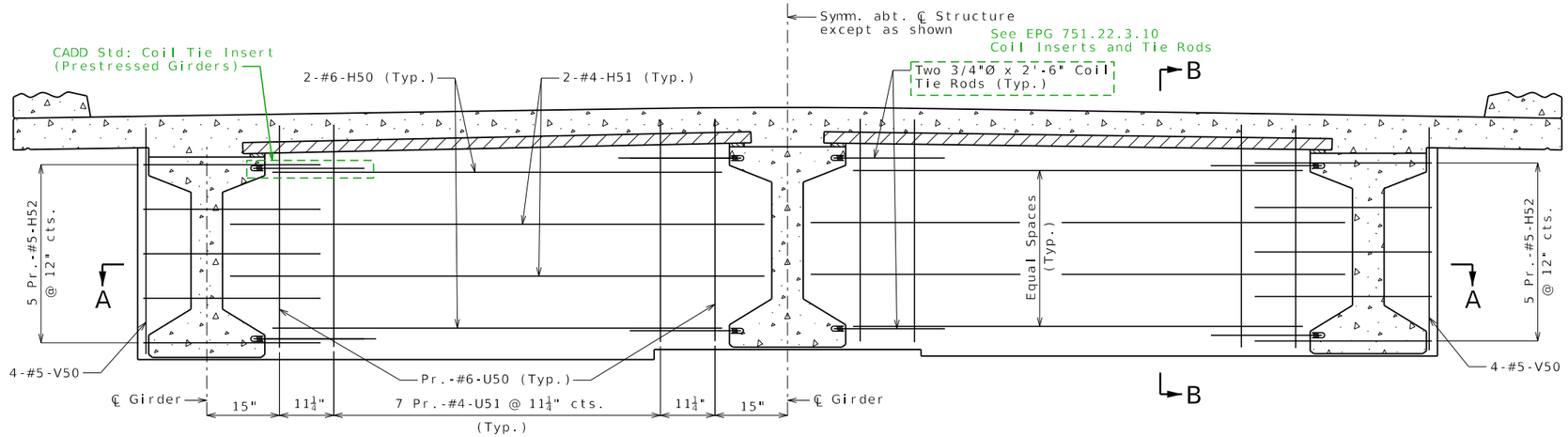

SECTION NEAR INTERMEDIATE BENT
Normal to ℄ Structure

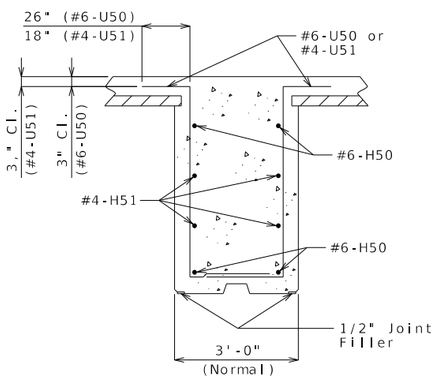

SECTION B-B

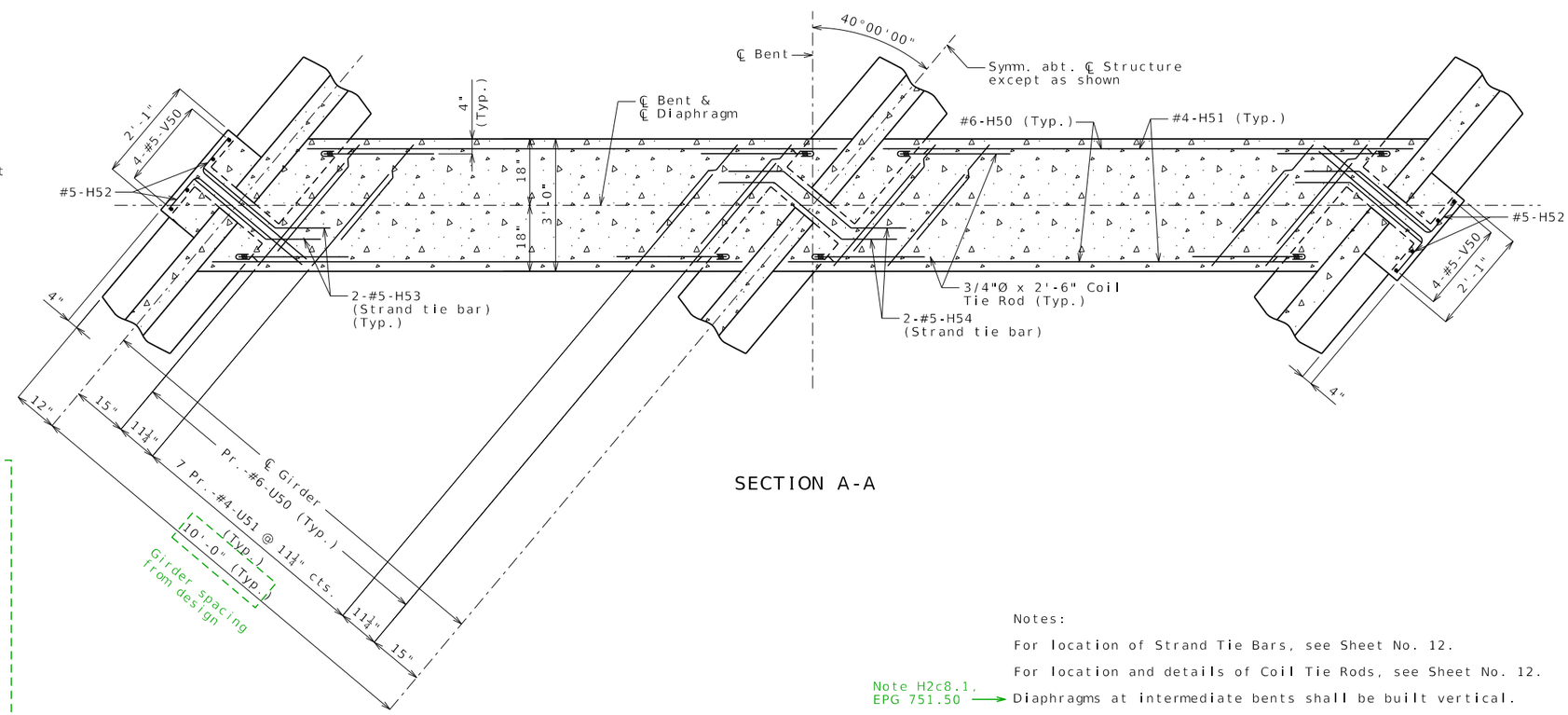

SECTION A-A

CADD Std: Edge Detail
(Closed at Fixed Bents)
(Concrete Diaphragms)

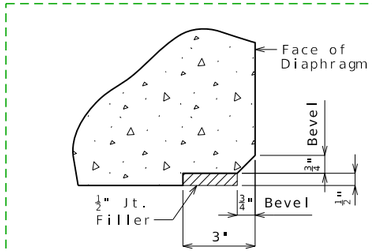

EDGE DETAIL

Notes:

For location of Strand Tie Bars, see Sheet No. 12.

For location and details of Coil Tie Rods, see Sheet No. 12.

Note H2c8.1, EPG 751.50 → Diaphragms at intermediate bents shall be built vertical.

All U-bars in diaphragms are to be placed parallel to ℄ Roadway.

CONCRETE DIAPHRAGMS AT INTERMEDIATE BENT NO. 2

Detailed July 2020
Checked July 2020

Note: This drawing is not to scale. Follow dimensions.

Sheet No. 14 of

DATE PREPARED	
12/28/2023	
ROUTE	STATE MO
DISTRICT BR	SHEET NO. 14
COUNTY	
JOB NO.	
CONTRACT ID.	
PROJECT NO.	
BRIDGE NO. EXAMPLE	

DESCRIPTION

DATE

MISSOURI HIGHWAYS AND TRANSPORTATION COMMISSION
105 WEST CAPITOL
JEFFERSON CITY, MO 65102
1-888-ASK-MODOT (1-888-275-6636)

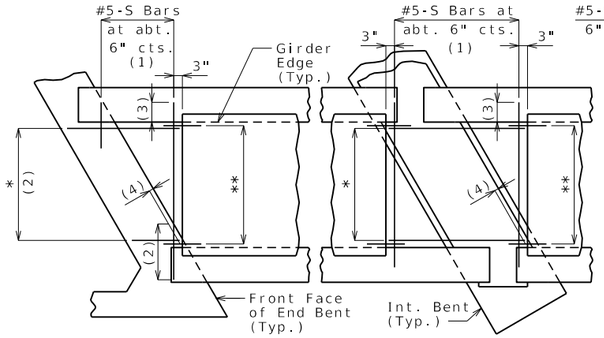

SQUARED END PANELS OR TRUNCATED END PANELS

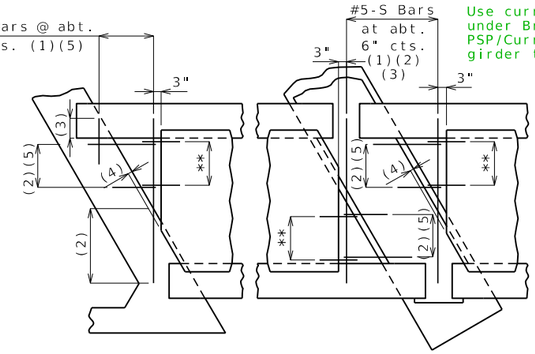

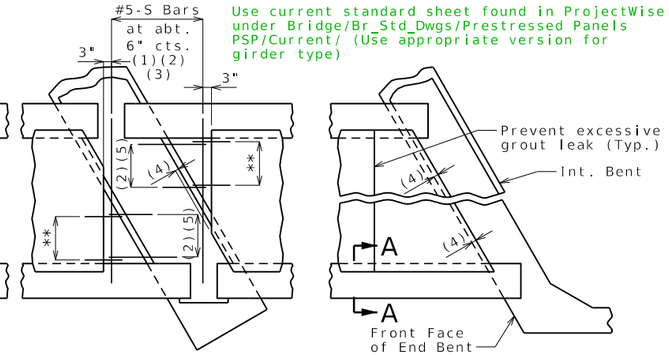

Use current standard sheet found in ProjectWise under Bridge/Br_Std_Dwgs/Prestressed Panels PSP/Current/ (Use appropriate version for girder type)

SKEWED END PANELS

EPG 751.10.2 General Superstructure, Stay-in-Place Bridge Deck Forms

PLAN SHOWING PANEL PLACEMENT

* #5-S Bars at abt. 9" cts. (1)
** #3-P1 at 12" cts. (End panels only)

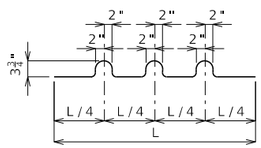

BENDING DIAGRAM FOR U1 BAR

U1 Bars may be oriented at right angles to location and spacing shown. U1 Bars shall be placed between P1 bars.

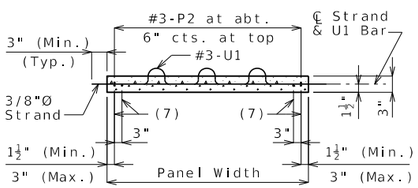

SECTION B-B

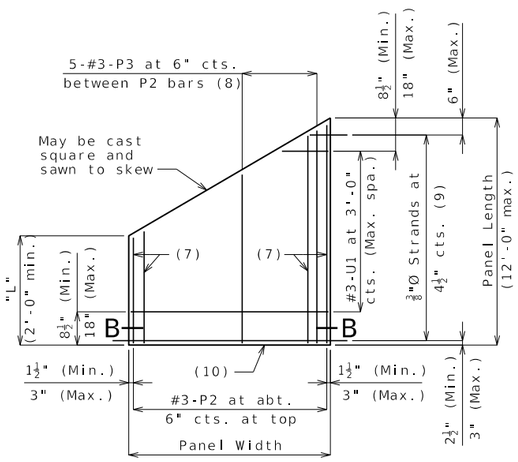

PLAN OF OPTIONAL SKEWED END PANEL

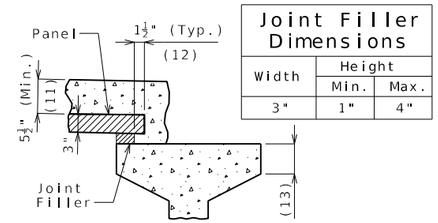

Joint Filler Dimensions		
Width	Height	
	Min.	Max.
3"	1"	4"

SECTION A-A

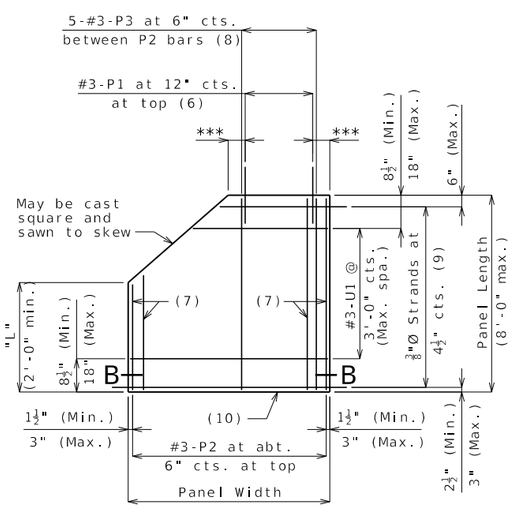

PLAN OF OPTIONAL TRUNCATED END PANEL

*** 3" (Min.), 6" (Max.)

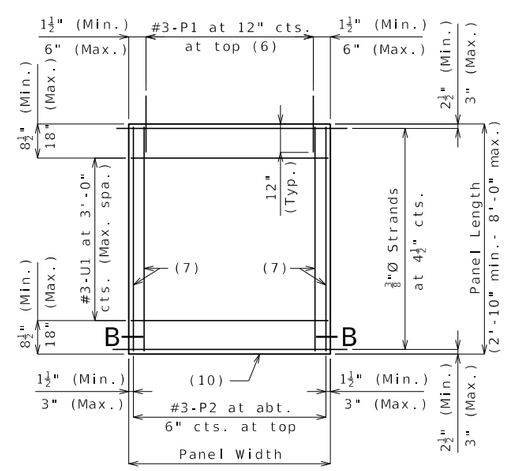

PLAN OF SQUARED PANEL

Reference Notes:

Plan of Panel Placement:

(1) S-bars shown are bottom steel in slab between panels and used with squared and truncated end panels only.

(2) Extend S-bars 18 inches beyond the front face of end bents and int. bents for squared and truncated end panels only.

(3) Extend S-bars 9 inches beyond edge of girder (Typ.).

(4) End panels shall be dimensioned 1/2" min. to 1 1/2" max. from the inside face of diaphragm.

(5) For truncated end panels, use a min. of #5-S bars at 6" crossings in openings, or min. 4x4-W7xW7.

Plans of Panels:

(6) For end panels only, P1 bars shall be 2'-0" in length and embedded 12". P1 bars will not be required for panels at squared integral end bents.

(7) #3-P2 bars near edge of panel at bottom (under strands).

(8) Use #3-P3 bars if panel is skewed 45° or greater.

(9) Any strand 2'-0" or shorter shall have a #4 reinforcing bar on each side of it, centered between strands. Strands 2'-0" or shorter may then be debonded at the fabricator's option.

(10) Optional 1/2" x 45° Chamfer one or both sides at bottom.

Section A-A:

(11) Slab thickness over prestressed panels varies due to girder camber. In order to maintain minimum slab thickness, it may be necessary to raise the grade uniformly throughout the structure. No payment will be made for additional labor or materials required for necessary grade adjustment.

(12) Contractor shall ensure proper consolidation under and between panels.

(13) At the contractor's option, the variation in slab thickness over prestressed panels may be eliminated or reduced by increasing and varying the girder top flange thickness. Dimensions shall be shown on the shop drawings.

General Notes:

Prestressed Panels:

Concrete for prestressed panels shall be Class A-1 with f'c = 6,000 psi, f'ci = 4,000 psi.

The top surface of all panels shall receive a scored finish with a depth of scoring of 1/8" perpendicular to the prestressing strands in the panels.

Prestressing tendons shall be high-tensile strength, uncoated, seven-wire, low-relaxation strands for prestressed concrete in accordance with AASHTO M 203 Grade 270, with nominal diameter of strand = 3/8" and nominal area = 0.085 sq.in. and minimum ultimate strength = 22.95 kips (270 ksi). Larger strands may be used with the same spacing and initial tension.

Initial prestressing force = 17.2 kips/strand.

The method and sequence of releasing the strands shall be shown on the shop drawings.

Suitable anchorage devices for lifting panels may be cast in panels, provided the devices are shown on the shop drawings and approved by the engineer. Panel lengths shall be determined by the contractor and shown on the shop drawings.

When squared end panels are used at skewed bents, the skewed portion shall be cast full depth. No separate payment will be made for additional concrete and reinforcing required.

Support from diaphragm forms is required under the optional skewed end until cast-in-place concrete has reached 3,000 psi compressive strength.

Prestressed panels shall be brought to saturated surface-dry (SSD) condition just prior to the deck pour. There shall be no free standing water on the panels or in the area to be cast.

The prestressed panel quantities are not included in the table of estimated quantities for the slab.

Reinforcing Steel:

All dimensions are out to out.

Hooks and bends shall be in accordance with the CRSI Manual of Standard Practice for Detailing Reinforced Concrete Structures, Stirrup and Tie Dimensions.

Minimum clearance to reinforcing steel shall be 1 1/2", unless otherwise shown.

If U1 bars interfere with placement of slab steel, U1 loops may be bent over, as necessary, to clear slab steel.

Deformed welded wire reinforcement (WWR) providing a minimum area of reinforcing perpendicular to strands of 0.22 sq in./ft, with spacing parallel to strands sufficient to ensure proper handling, may be used in lieu of the #3-P2 bars shown. Wire diameter shall not be larger than 0.375 inch. The above alternative reinforcement criteria may be used in lieu of the #3-P3 bars, when required, and placed over a width not less than 2 feet.

The following reinforcing steel shall be tied securely to the strands with the following maximum spacing in each direction:
#3-P2 bars at 16 inches.
WWR at 24 inches.

The #3-U1 bars shall be tied securely to #3-P2 bars, to WWR or to strands (when placed between P1 bars) at about 3-foot centers.

Minimum reinforcement steel length shall be 2'-0".

All reinforcement other than prestressing strands shall be epoxy coated.

Precast panels may be in contact with stirrup reinforcing in diaphragms.

S-bars are not listed in the bill of reinforcing.

Cost of S-bars will be considered completely covered by the contract unit price for the slab.

Joint Filler:

Joint filler shall be preformed fiber expansion joint material in accordance with Sec 1057 or expanded or extruded polystyrene bedding material in accordance with Sec 1073.

Use Slab Haunching Diagram on Sheet No. 17 for determining thickness of joint filler within the limits noted in the table of Joint Filler Dimensions.

Thicker material may be used on one or both sides of the girder to reduce cast-in-place concrete thickness to within tolerances.

The same thickness of preformed fiber expansion joint material shall be used under any one edge of any panel except at locations where top flange thickness may be stepped. The maximum change in thickness between adjacent panels shall be 1/2 inch. The polystyrene bedding material may be cut with a transition to match haunch height above top of flange.

Joint filler shall be glued to the girder. When thickness exceeds 1 1/2 inches, the joint filler shall be glued top and bottom. The glue used shall be the type recommended by the joint filler manufacturer.

Edges of panels shall be uniformly seated on the joint filler before slab reinforcement is placed.

Filling in this sheet no. is the only thing that needs done to this sheet.

DATE PREPARED	12/28/2023
ROUTE	STATE MO
DISTRICT BR	SHEET NO. 15
COUNTY	
JOB NO.	
CONTRACT ID.	
PROJECT NO.	
BRIDGE NO.	EXAMPLE

DESCRIPTION

DATE

MISSOURI HIGHWAYS AND TRANSPORTATION COMMISSION
105 WEST CAPITOL
JEFFERSON CITY, MO 65102
1-888-ASK-MODOT (1-888-275-6636)

Detailed May 2023
Checked May 2023

Note: This drawing is not to scale. Follow dimensions.

PRESTRESSED PANELS

Use current standard sheet found in ProjectWise
Bridge/Br_Std_Dwgs/Drains VDRA-SDRA/SDRA/Current/
(Use appropriate version for girder type)

EPG 751.10.3 Bridge Deck Drainage - Slab Drains

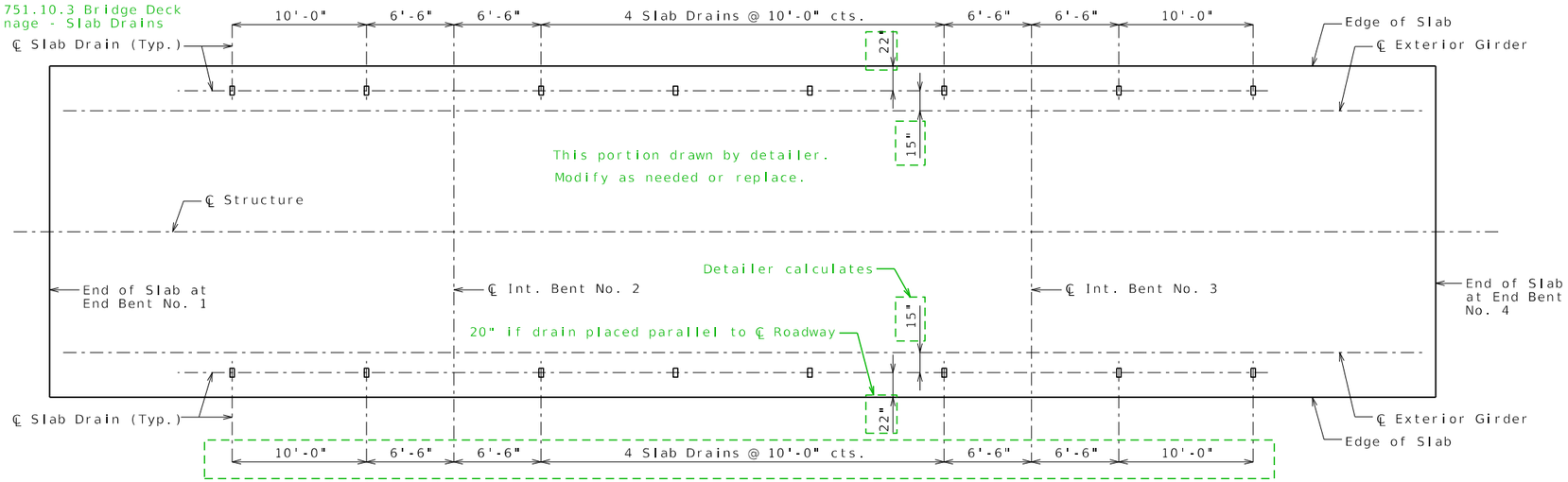

PLAN OF SLAB SHOWING SLAB DRAIN LOCATIONS

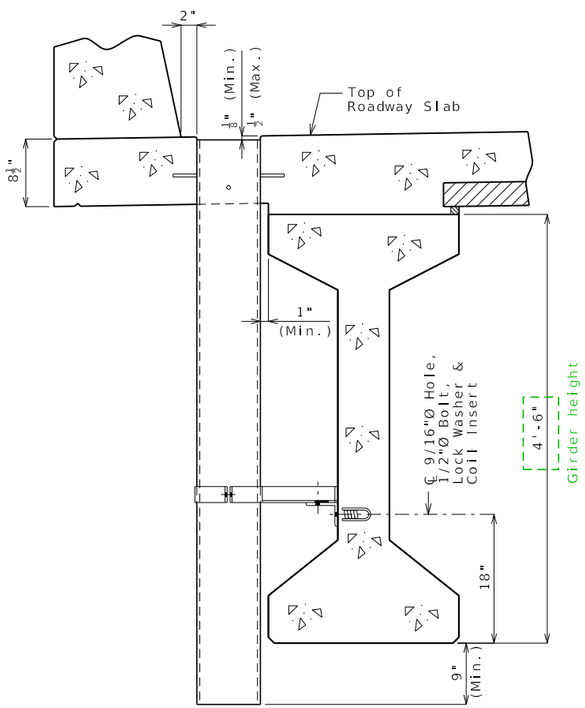

PART SECTION NEAR DRAIN

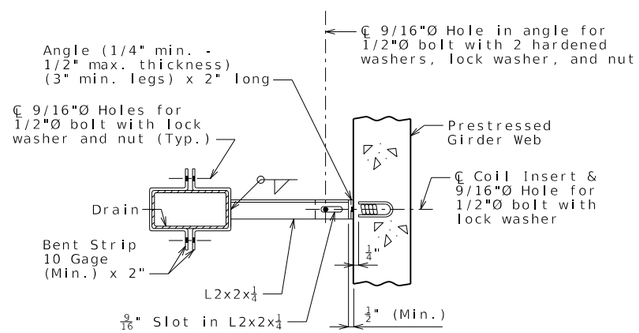

PART SECTION SHOWING BRACKET ASSEMBLY

On Standard Drawing, Details of Drains Parallel to Roadway are drawn outside the border. If needed, use those in place of details for transverse drains shown in this example.

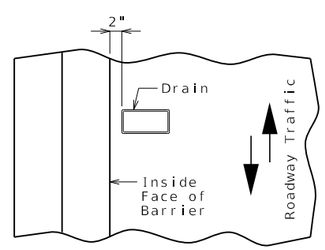

PART PLAN OF SLAB AT DRAIN

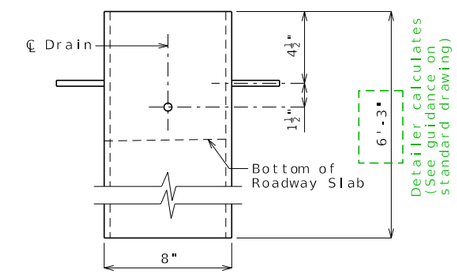

ELEVATION OF DRAIN

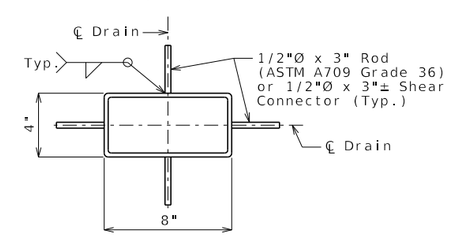

PLAN OF STEEL DRAIN OPTION

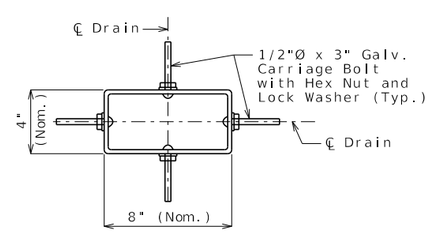

PLAN OF FRP DRAIN OPTION

General Notes:

Contractor shall have the option to construct either steel or FRP slab drains. All drains shall be of same type.

Slab drain bracket assembly shall be ASTM A709 Grade 36 steel.

Locate drains in slab by dimensions shown in Part Section Near Drain.

Reinforcing steel shall be shifted to clear drains.

The coil inserts and bracket assembly shall be galvanized in accordance with ASTM A123.

All bolts, hardened washers, lock washers and nuts shall be galvanized in accordance with AASHTO M 232 (ASTM A153), Class C.

All 1/2"Ø bolts shall be ASTM A307.

Shop drawings will not be required for the slab drains and the bracket assembly.

The coil insert required for the bracket assembly attachment shall be located on the prestressed girder shop drawings.

Coil inserts shall have a concrete pull-out strength (ultimate load) of at least 2,500 pounds in 5,000 psi concrete.

The bolt required to attach the slab drain bracket assembly to the prestressed girder web shall be supplied by the prestressed girder fabricator.

Notes for Steel Drain:

Slab drains may be fabricated of either 1/4" welded sheets of ASTM A709 Grade 36 steel or from 1/4" structural steel tubing ASTM A500 or A501.

Outside dimensions of drains are 8" x 4".

The drains shall be galvanized in accordance with ASTM A123.

Notes for FRP Drain:

Drains shall be machine filament-wound thermosetting resin tubing meeting the requirements of ASTM D2996 with the following exceptions:

Shape of drains shall be rectangular with outside nominal dimensions of 8" x 4".

Minimum reinforced wall thickness shall be 1/4 inch.

The resin used shall be ultraviolet (UV) resistant and/or have UV inhibitors mixed throughout. Drains may have an exterior coating for additional UV resistance.

The color of the slab drain shall be gray (Federal Standard 26373). The color shall be uniform throughout the resin and any coating used.

The combination of materials used in the manufacture of the drains shall be tested for UV resistance in accordance with ASTM D4329 Cycle A. The representative material shall withstand at least 500 hours of testing with only minor discoloration and without any physical deterioration. The contractor shall furnish the results of the required ultraviolet testing prior to acceptance of the slab drains.

At the contractor's option, drains may be field cut. The method of cutting FRP slab drain shall be as recommended by the manufacturer to ensure a smooth, chip free cut.

DATE PREPARED	
5/10/2023	
ROUTE	STATE MO
DISTRICT BR	SHEET NO. 16
COUNTY	
JOB NO.	
CONTRACT ID.	
PROJECT NO.	
BRIDGE NO. EXAMPLE	

DESCRIPTION	DATE

MISSOURI HIGHWAYS AND TRANSPORTATION COMMISSION
105 WEST CAPITOL
JEFFERSON CITY, MO 65102
1-888-ASK-MODOT (1-888-275-6636)

IF A SEAL IS PRESENT ON THIS SHEET IT HAS BEEN ELECTRONICALLY SEALED AND DATED.

SLAB DRAINS

Detailed May 2023
Checked May 2023

Note: This drawing is not to scale. Follow dimensions.

CADD Std: P/S Girder Haunching Diagram - Quarter Pts or P/S Girder Haunching Diagram - Tenth Pts (Slab Sheet Details)
Modify as needed. Fill in information from design.

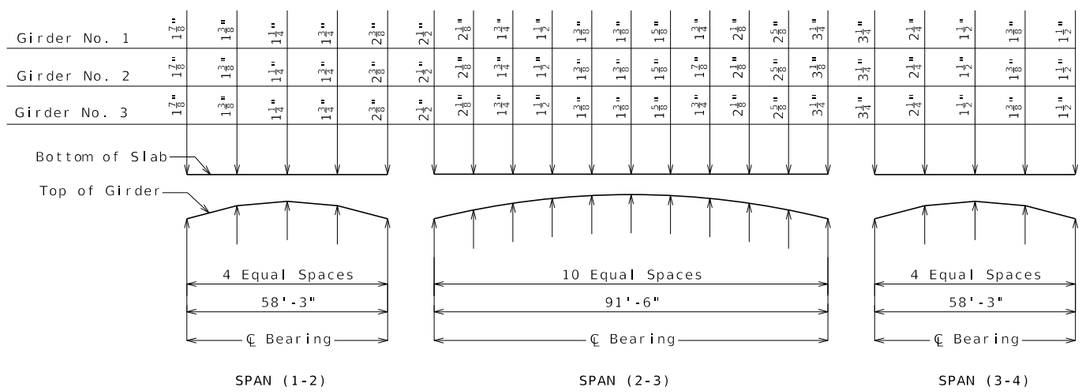

THEORETICAL SLAB HAUNCHING DIAGRAM

Use quarter points for spans less than 75'.
Use tenth points for spans 75' or more.

CADD Std: Girder Bottom of Slab Elevations - Quarter Pts or Girder Bottom of Slab Elevations - Tenth Pts (Slab Sheet Details)
Modify as needed. Fill in information from design.

Theoretical Bottom of Slab Elevations at Centerline of Girder (Prior to forming for slab) (Estimated at 90 days)

Girder Number	Span (1-2) (58'-3" ℄ Brg. - ℄ Brg.)										
	℄ Brg.	.25	.50	.75	℄ Brg.						
1	875.75	875.84	875.92	875.99	876.05						
2	875.98	876.06	876.14	876.21	876.27						
3	875.84	875.92	876.00	876.07	876.13						
	Span (2-3) (91'-6" ℄ Brg. - ℄ Brg.)										
	℄ Brg.	.10	.20	.30	.40	.50	.60	.70	.80	.90	℄ Brg.
1	876.05	876.13	876.21	876.28	876.34	876.39	876.43	876.46	876.48	876.50	876.51
2	876.28	876.36	876.44	876.52	876.58	876.63	876.67	876.70	876.72	876.73	876.73
3	876.14	876.22	876.29	876.36	876.42	876.47	876.51	876.55	876.57	876.58	876.59
	Span (3-4) (58'-3" ℄ Brg. - ℄ Brg.)										
	℄ Brg.	.25	.50	.75	℄ Brg.						
1	876.52	876.60	876.68	876.75	876.81						
2	876.74	876.83	876.91	876.97	877.03						
3	876.60	876.69	876.77	876.83	876.89						

Elevations are based on a constant slab thickness of 8 1/2" and include allowance for theoretical dead load deflections due to weight of slab (including precast panel and barrier).

CADD Std: Girder Bottom of Slab Elevations Diagram (Slab Sheet Details)
See EPG 751.22.3.6

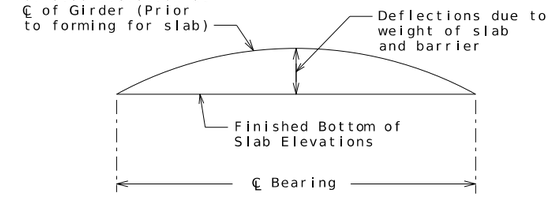

TYPICAL SLAB ELEVATIONS DIAGRAM

CADD Std: P/S Girder Camber Diagram (C < A) or P/S Girder Camber Diagram (A < C) (Slab Sheet Details)
Fill in information from design.

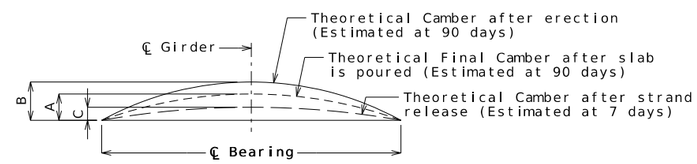

Girder	Span (1-2)			Span (2-3)			Span (3-4)		
	A	B	C	A	B	C	A	B	C
Exterior	7/8"	1 1/8"	3/4"	1 1/2"	2 7/8"	1 1/4"	7/8"	1 1/8"	3/4"
Interior	3/4"			1 3/8"			3/4"		

GIRDER CAMBER DIAGRAM

Conversion Factors for Girder Camber (Estimated at 90 days):

0.1 pt. = 0.314 x 0.5 pt.
0.2 pt. = 0.593 x 0.5 pt.
0.3 pt. = 0.813 x 0.5 pt.
0.4 pt. = 0.952 x 0.5 pt.
— Use with spans 75' and greater in length.

0.25 pt. = 0.7125 x 0.5 pt. — Use with spans less than 75' in length.

EPG 751.50

Note H2c6.10

If girder camber is different from that shown in the camber diagram, in order to maintain minimum slab thickness, an adjustment of the slab haunches, an increase in slab thickness or a raise in grade uniformly throughout the structure may be necessary. The haunch shall be limited to ensure the projecting girder reinforcement is embedded into the slab at least 2 inches. No payment will be made for additional labor or materials required for variation in haunching, slab thickness or grade adjustment.

Note H2c6.11

Concrete in the slab haunches is included in the Estimated Quantities for Slab on Concrete I-Girder.

DATE PREPARED	
12/28/2023	
ROUTE	STATE
	MO
DISTRICT	SHEET NO.
BR	17
COUNTY	
JOB NO.	
CONTRACT ID.	
PROJECT NO.	
BRIDGE NO.	
EXAMPLE	

DESCRIPTION

DATE

MISSOURI HIGHWAYS AND TRANSPORTATION COMMISSION
105 WEST CAPITOL
JEFFERSON CITY, MO 65102
1-888-ASK-MODOT (1-888-275-6636)

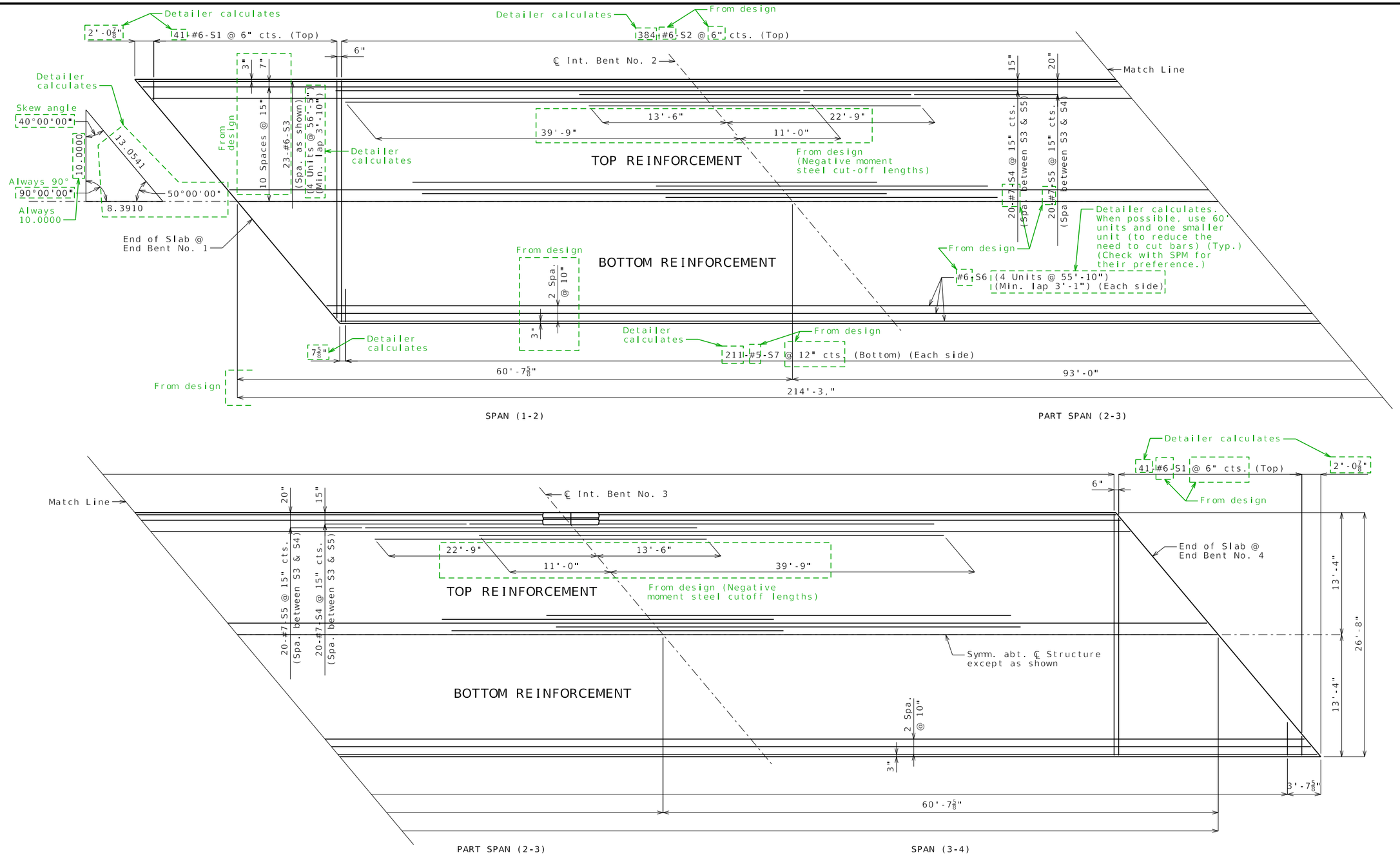

Notes:

Note H11.8 (EPG 751.50) Longitudinal slab dimensions are measured horizontally.

For Section Thru Slab and Slab Pouring Sequence, see Sheet No. 19.

For Details and Reinforcement of Safety Barrier Curb not shown, see Sheets No. 20, 21 & 22.

For Theoretical Slab Haunching Diagram, see Sheet No. 17.

For Details of Precast Prestressed Panels, see Sheet No. 15.

For Theoretical Bottom of Slab Elevations, see Sheet No. 17.

For details and locations of Slab Drains, see Sheet No. 16.

EPG 751.10.1.7.2 Standard Partial Depth Precast Prestressed Panel Bridge Deck...

PLAN OF SLAB SHOWING REINFORCEMENT

Detailed July 2020
Checked July 2020

Note: This drawing is not to scale. Follow dimensions.

DATE PREPARED	1/2/2024
ROUTE	STATE MO
DISTRICT BR	SHEET NO. 18
COUNTY	
JOB NO.	
CONTRACT ID.	
PROJECT NO.	
BRIDGE NO.	EXAMPLE

DESCRIPTION

DATE

MISSOURI HIGHWAYS AND TRANSPORTATION COMMISSION
105 WEST CAPITOL
JEFFERSON CITY, MO 65102
1-888-ASK-MODOT (1-888-275-6636)

Use current standard sheet found in ProjectWise
Bridge/Br_Std_Dwgs/Slab Sections SLAB/Current
(Use appropriate version for roadway width)

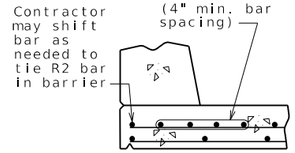

OPTIONAL SHIFTING TOP BARS AT BARRIER

Included on std dwg, but also available as a cell in CADD Std: Optional Shifting Top Bars at Type D or H Barrier (Slab Sheet Details)

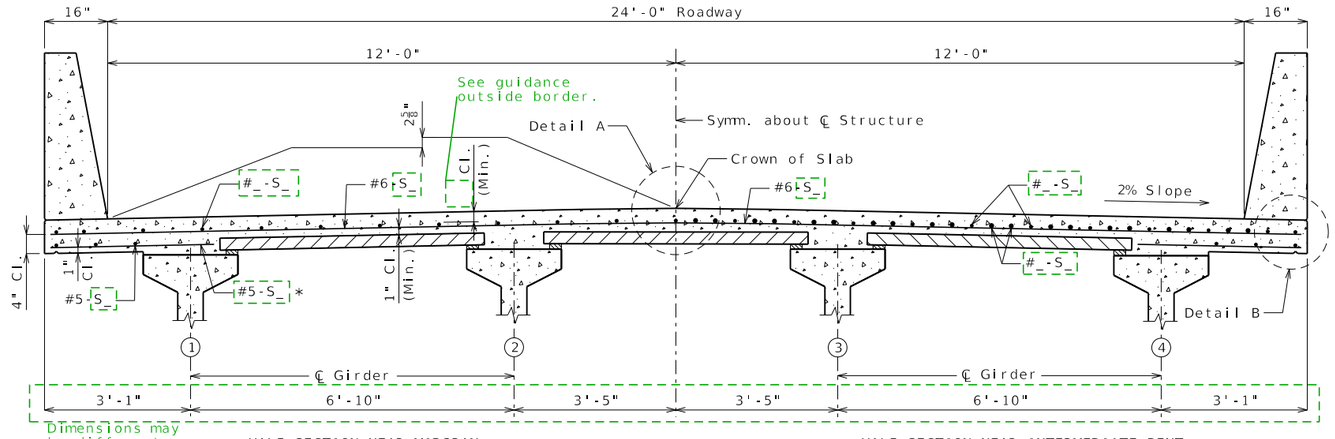

SECTION THRU SLAB

* Alternate bar shape available, see barrier sheet.

Slab sections for other types of girders are available outside the border of the standard drawing.

Insert the proper cell from CADD Std: Slab Pouring Sequences. See EPG 751.10.1.12
If using Case 1 for a prestressed girder bridge, remove "No Retarder" column and see EPG 751.50 (H6) for proper notes.
Adjust detail to the appropriate skew.

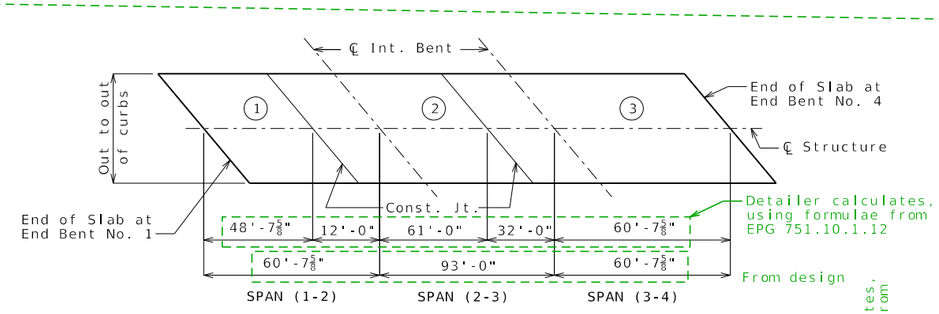

	Sequence of Pours			Min. Rate of Pour Cu. Yds./Hr.
	Direction			With Retarder
Basic Sequence	1	2	3	25
	End to 2	1 to 3	2 to End	
Alternate pours to the basic sequence are subject to the approval of the engineer in accordance with Sec 703.				
Alternate A Pours	1 + 2		3	25
	End to 3		2 to End	
Alternate B Pours	1 + 2 + 3			25
	End to End			

Detailer calculates, using formulae from EPG 751.10.1.12

The contractor shall furnish an approved retarder to retard the set of the concrete to 2.5 hours, and shall pour and satisfactorily finish the slab pours at the rate given.

The concrete diaphragm at the intermediate bents and integral end bents shall be poured a minimum of 30 minutes and a maximum of 2 hours before the slab is poured.

SLAB POURING SEQUENCE

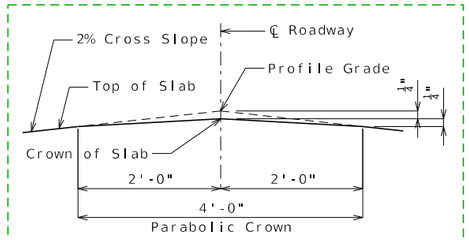

DETAIL A

Included on std dwg, but also available as a cell in CADD Std: Parabolic Crown Detail - 2% Slope (Slab Sheet Details or End Bents)

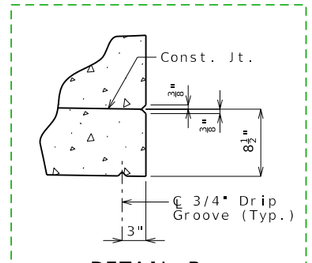

DETAIL B

Included on std dwg, but also available as a cell in CADD Std: Drip Groove & Chamfer Detail (Slab Sheet Details)

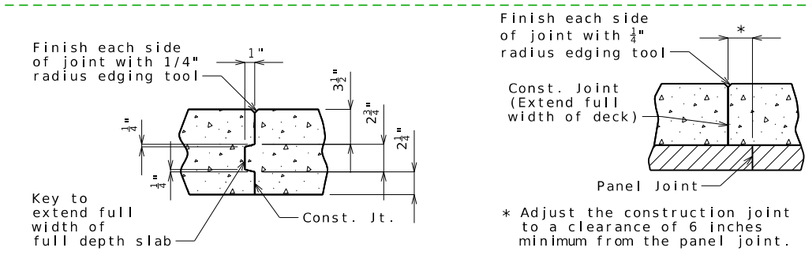

SLAB CONSTRUCTION JOINT

Included on std dwg, but also available as a cell in CADD Std: Const. Joint Detail - P/C P/S Panel Deck (Slab Pouring Sequences)

Notes:

For details of precast prestressed panels, see Sheet No. 15.

For reinforcement of barrier not shown, see Sheet No. .

For Theoretical Bottom of Slab Elevations, Girder Camber Diagram and Theoretical Slab Haunching Diagram, see Sheet No. 17.

For Plan of Slab Showing Reinforcement, see Sheet No. 18.

SLAB DETAILS

Detailed July 2020
Checked July 2020

Note: This drawing is not to scale. Follow dimensions.

DATE PREPARED	
5/10/2023	
ROUTE	STATE
	MO
DISTRICT	SHEET NO.
BR	19
COUNTY	
JOB NO.	
CONTRACT ID.	
PROJECT NO.	
BRIDGE NO.	
EXAMPLE	

DESCRIPTION

DATE

MISSOURI HIGHWAYS AND TRANSPORTATION COMMISSION
105 WEST CAPITOL
JEFFERSON CITY, MO 65102
1-888-ASK-MODOT (1-888-275-6636)

Use current standard drawing found in ProjectWise Bridge/Br_Std_Dwgs/Barriers BAR-BAC
(Use appropriate version for barrier type, noted on Bridge Memo)

Drawn by detailer

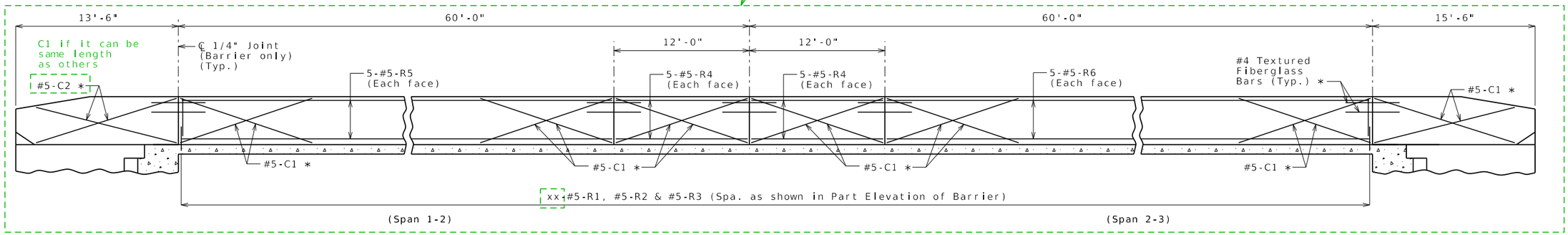

See EPG 751.12.1.2.1 Slip Forming for length of C bars.

ELEVATION OF BARRIER

(Left barrier shown, right barrier similar)

Longitudinal dimensions are horizontal.

If left and right barriers are different (such as on a curved bridge), two elevations will be needed.

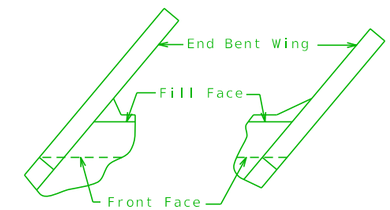

Barrier at end bent extends past front face of end bent on skewed structures.

Guidance and additional or alternate details are available outside the border of the standard drawing.

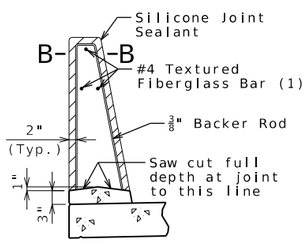

SECTION THRU SAW CUT JOINT

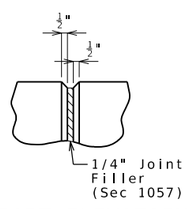

PART ELEVATION AT FORMED JOINT

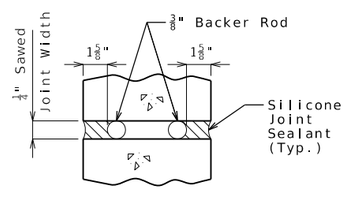

SECTION B-B

Detailer calculates

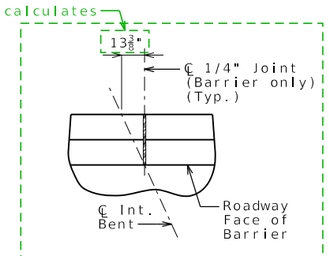

PART PLAN SHOWING JOINT LOCATION

This detail is available outside the border, for left advance (LA) and right advance (RA) bridges. Detail not required for squared bridges.

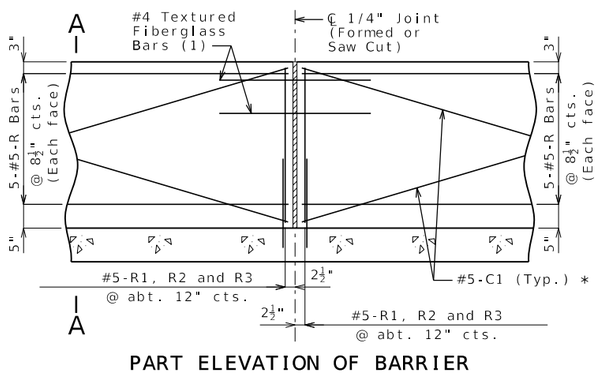

PART ELEVATION OF BARRIER

(1) Four feet long, centered on joint, slip-formed option only

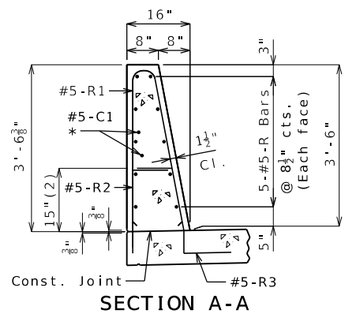

SECTION A-A

Use a minimum lap of 3'-1" for #5 horizontal barrier bars.

The cross-sectional area above the slab is 3.52 square feet.

(2) To top of bar

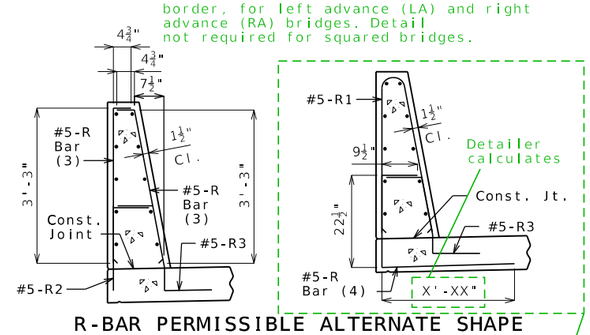

R-BAR PERMISSIBLE ALTERNATE SHAPE

(3) The R1 bar may be separated into two bars as shown, at the contractor's option, only when slip forming is not used. (All dimensions are out to out.)

(4) The R2 bar and #5 bottom transverse slab bar in cantilever (prestressed panels only) combination may be furnished as one bar as shown, at the contractor's option.

Remove detail and note if precast panels are not used in the slab.

General Notes:

* Slip-formed option only.

Conventional forming or slip forming may be used. Saw cut joints may be used with conventional forming.

Top of barrier shall be built parallel to grade and barrier joints (except at end bents) normal to grade.

All exposed edges of barrier shall have either a 1/2-inch radius or a 3/8-inch bevel, unless otherwise noted.

Payment for all concrete and reinforcement, complete in place, will be considered completely covered by the contract unit price for Type D Barrier per linear foot.

Concrete in barrier shall be Class B-1.

Measurement of barrier is to the nearest linear foot for each structure, measured along the outside top of slab from end of wing to end of wing.

Concrete traffic barrier delineators shall be placed on top of the barrier as shown on Missouri Standard Plan 617.10 and in accordance with Sec 617. Delineators on bridges with two-lane, two-way traffic shall have retroreflective sheeting on both sides. Concrete traffic barrier delineators will be considered completely covered by the contract unit price for Type D Barrier.

Joint sealant and backer rods shall be in accordance with Sec 717 for silicone joint sealant for saw cut and formed joints.

For slip-formed option, both sides of barrier shall have a vertically broomed finish and the top shall have a transversely broomed finish.

DATE PREPARED	
1/2/2024	
ROUTE	STATE MO
DISTRICT BR	SHEET NO. 20
COUNTY	
JOB NO.	
CONTRACT ID.	
PROJECT NO.	
BRIDGE NO. EXAMPLE	

DESCRIPTION

DATE

MISSOURI HIGHWAYS AND TRANSPORTATION COMMISSION
105 WEST CAPITOL
JEFFERSON CITY, MO 65102
1-888-ASK-MODOT (1-888-275-6636)

TYPE D BARRIER

Detailed May 2023
Checked May 2023

Note: This drawing is not to scale. Follow dimensions.

Use current standard sheet found in Projectwise under Bridge/Br_Std_Dwgs/Barriers BAC-BAR/BAR-Barriers/Current. See EPG 751.12.

Marked items determined by detailer.

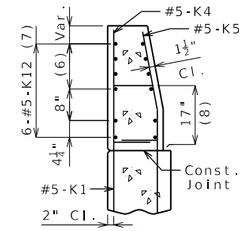

SECTION A-A

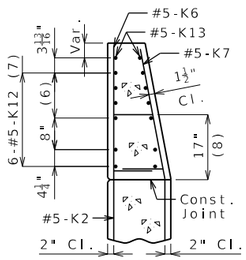

SECTION B-B

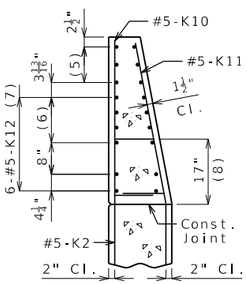

SECTION C-C

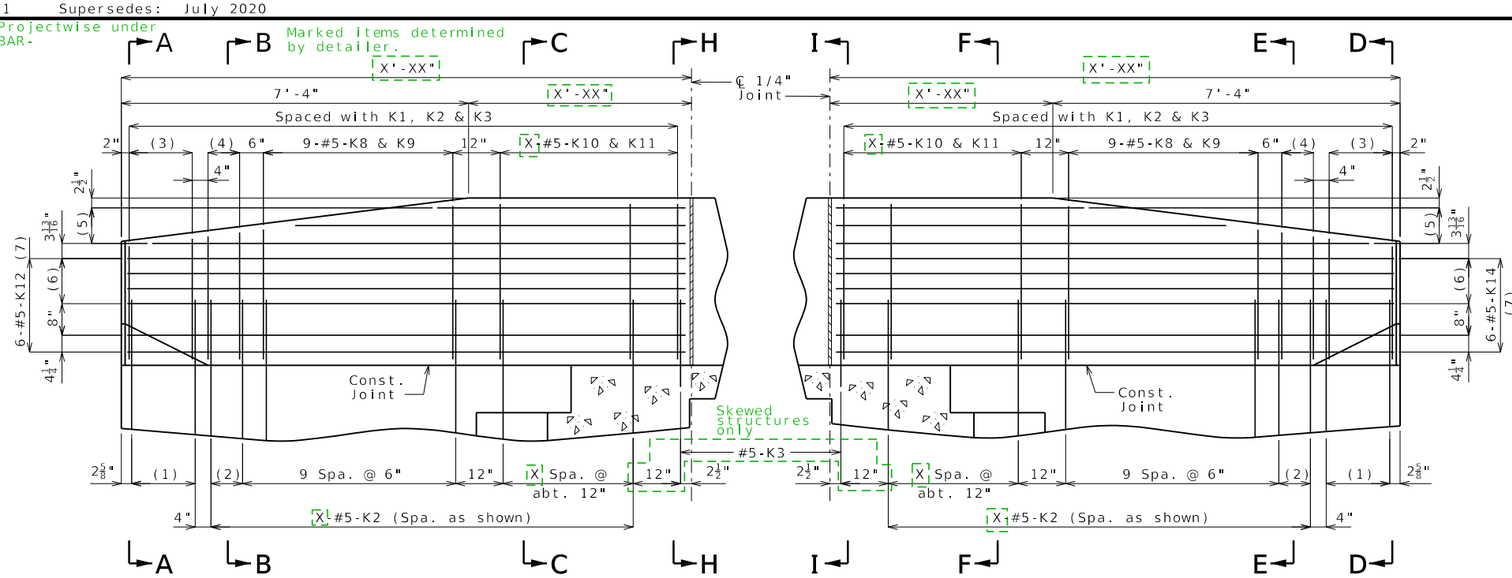

PART ELEVATION

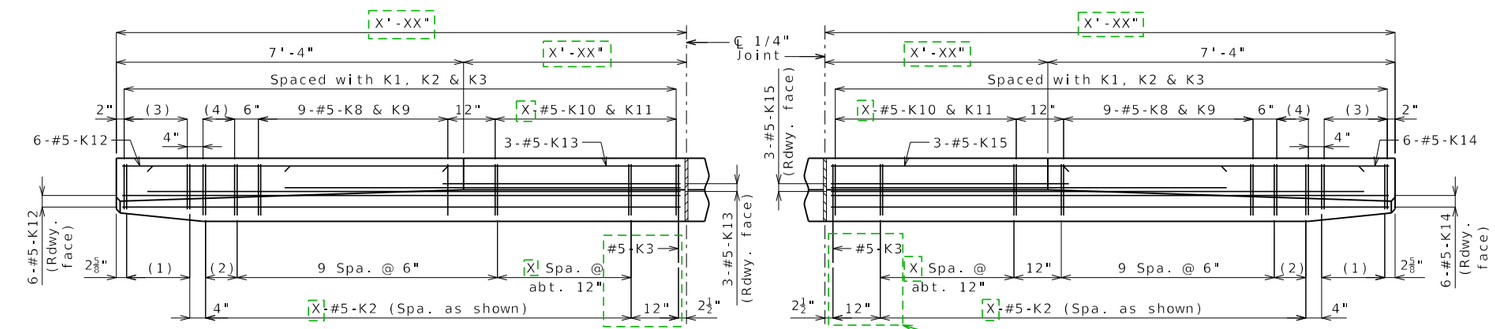

PART PLAN

For skews greater than 3 degrees, use alternate details (available on standard drawing), which substitute a K3 bar for the end K2 bar. For skews greater than 41 degrees, two K3 bars are required.

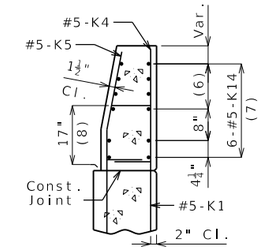

SECTION D-D

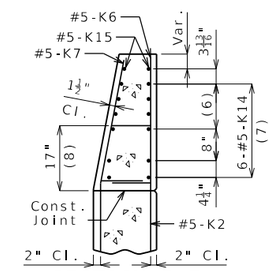

SECTION E-E

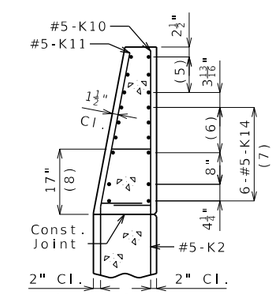

SECTION F-F

See standard drawing for additional guidance.

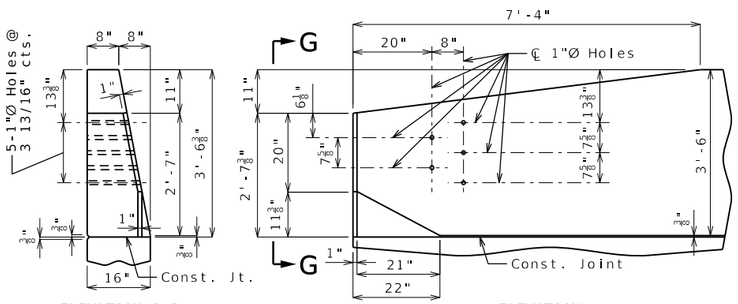

ELEVATION G-G

ELEVATION

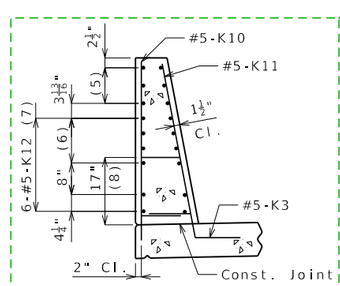

SECTION H-H

(1) 5-#5-K1 @ 4" cts.

(2) 2 spaces @ 4"

(3) 5-#5-K4 & K5

(4) 3-#5-K6 & K7

(5) 3-#5-K13 or K15 @ 4½" cts., each face

(6) 3 spaces @ 3 13/16"

(7) Spaced as shown, each face

(8) To top of bar

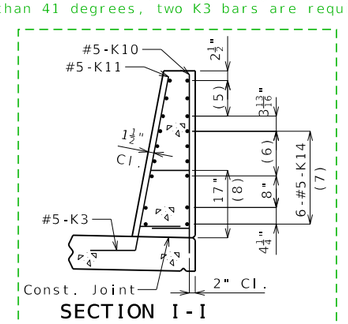

SECTION I-I

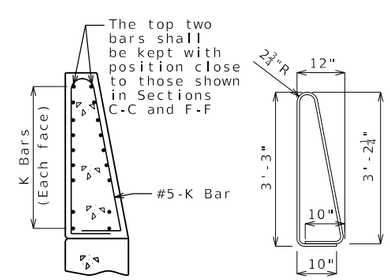

K10-K11 BAR PERMISSIBLE ALTERNATE SHAPE

(Other K bars not shown for clarity)

The K10-K11 bar combination may be furnished as one bar as shown, at the contractor's option.

All dimensions are out to out.

* Transition to zero at Type A curb for gutter lines to match.

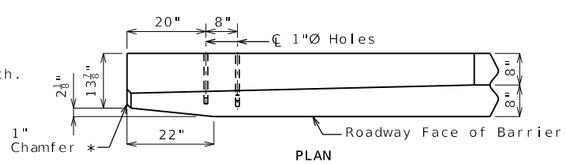

PLAN

DETAILS OF GUARD RAIL ATTACHMENT

General Notes:

Concrete traffic barrier delineators shall be placed on top of the barrier as shown on Missouri Standard Plan 617.10 and in accordance with Sec 617. Delineators on bridges with two-lane, two-way traffic shall have retroreflective sheeting on both sides. Concrete traffic barrier delineators will be considered completely covered by the contract unit price for Type D Barrier.

Reinforcing Steel:
Minimum clearance to reinforcing steel shall be 1 1/2" except as shown for bars embedded into end bent.

TYPE D BARRIER AT END BENTS

(Left barrier shown, right barrier similar)

Detailed May 2023
Checked May 2023

Note: This drawing is not to scale. Follow dimensions.

DATE PREPARED	12/29/2023
ROUTE	STATE MO
DISTRICT BR	SHEET NO. 21
COUNTY	
JOB NO.	
CONTRACT ID.	
PROJECT NO.	
BRIDGE NO.	EXAMPLE

DESCRIPTION

DATE

MISSOURI HIGHWAYS AND TRANSPORTATION COMMISSION
105 WEST CAPITOL
JEFFERSON CITY, MO 65102
1-888-ASK-MODOT (1-888-275-6636)

Additional guidance shown outside standard drawing border.

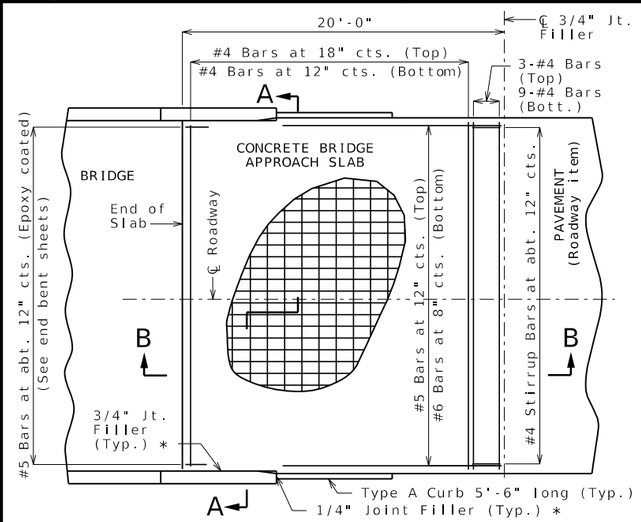

PART PLAN OF SQUARED STRUCTURE
(Skewed structure similar)

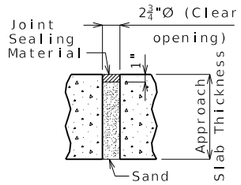

UNDERSEAL ACCESS HOLE DETAIL
(If required)

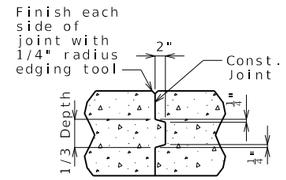

CONSTRUCTION JOINT DETAIL

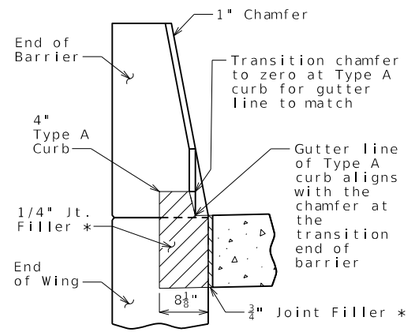

SECTION BETWEEN CURB AND BARRIER

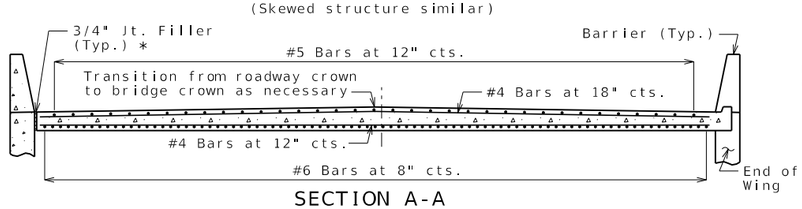

SECTION A-A

With the approval of the engineer, the contractor may crown the bottom of the approach slab to match the crown of the roadway surface.

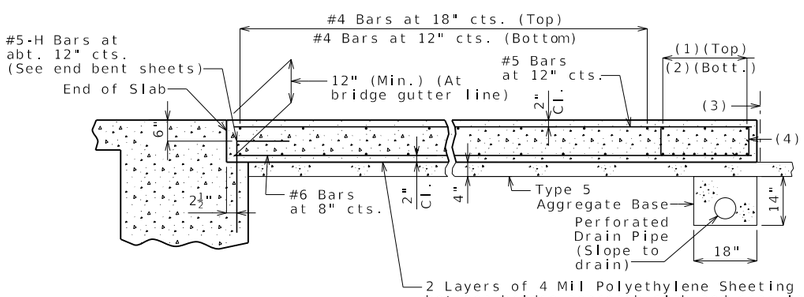

(1) 3-#4 Bars

(2) 9-#4 Bars

(3) ℄ 3/4" Jt. Filler

(4) #4 Stirrup Bars at abt. 12" cts.; 2'-0"x 8" (Min.) out to out; Actual length = 5'-10" (Min.); 90° stirrup hook at bottom; Stirrup height (8") and actual length vary due to crown.

SECTION B-B
(Integral end bent)

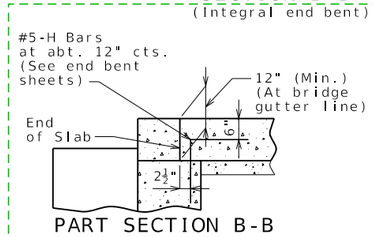

PART SECTION B-B
(Non-integral end bent)

May be removed if end bents are integral

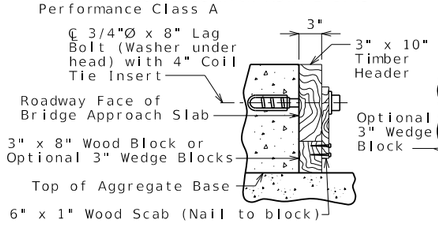

SECTION E-E

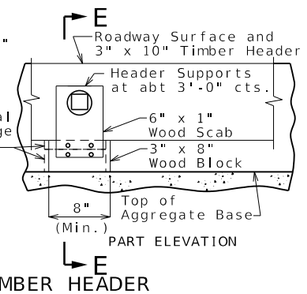

PART ELEVATION

DETAILS OF TIMBER HEADER
Remove timber header when concrete pavement is placed.

OPTIONAL CONCRETE SLAB

Notes For Concrete Slab Only:

All concrete for the bridge approach slab shall be in accordance with Sec 503 (f'c = 4,000 psi).

The reinforcing steel in the bridge approach slab shall be epoxy coated Grade 60 with fy = 60,000 psi.

Longitudinal construction joints in bridge approach slab shall be aligned with longitudinal construction joints in bridge slab.

Minimum clearance to reinforcing steel shall be 1 1/2", unless otherwise shown.

The reinforcing steel in the bridge approach slab shall be continuous. The transverse reinforcing steel may be made continuous by providing a minimum lap splice of 23 inches for #4 bars, or by mechanical bar splice.

Mechanical bar splices shall be in accordance with Sec 710.

All joint filler shall be in accordance with Sec 1057 for preformed fiber expansion joint filler except as noted.

Payment for furnishing all materials, labor and excavation necessary to construct the concrete bridge approach slab, including the timber header, underdrain, Type 5 aggregate base, joint filler, and all other appurtenances and incidental work as shown on this sheet, complete in place, will be considered completely covered by the contract unit price for Bridge Approach Slab (Minor) per square yard.

See Missouri Standard Plan 609.00 for details of Type A curb.

Drain pipe may be either 6" diameter corrugated metallic-coated pipe underdrain, 4" diameter corrugated polyvinyl chloride (PVC) drain pipe, or 4" diameter corrugated polyethylene (PE) drain pipe.

* Seal joint between vertical face of approach slab and wing with sealant in accordance with Sec 717 for silicone joint sealant for saw cut and formed joints.

Use current standard drawing found in ProjectWise under Bridge/Br_Std_Dwgs/Approach Slabs-APP/Current. Choose the appropriate standard drawing for your structure.

General Notes:

Contractor shall have the option to construct either slab except as noted.

The contractor shall pour and satisfactorily finish the bridge slab before placing the bridge approach slab.

MoDOT Construction personnel will indicate the bridge approach slab used for this structure:

☐ Concrete Bridge Approach Slab

☐ Asphalt Bridge Approach Slab

Notes For Asphalt Slab Only:

Payment for furnishing all materials, labor and excavation necessary to construct the asphalt bridge approach slab, including tack, curb, and Type 5 aggregate base within the pay limits shown, complete in place, will be considered completely covered by the contract unit price for Bridge Approach Slab (Minor) per square yard.

Application of tack is required between lifts per Sec 403.

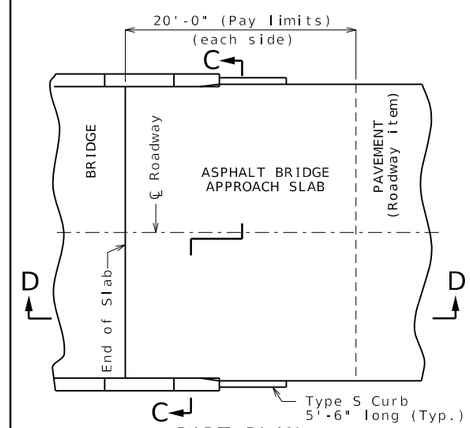

PART PLAN
(Squared structure shown, skewed structure similar)

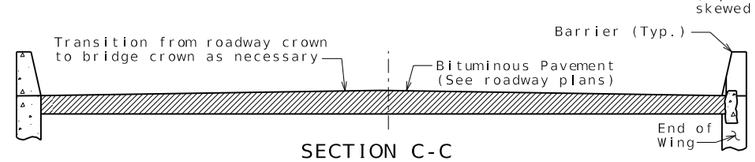

SECTION C-C

With the approval of the engineer, the contractor may crown the bottom of the approach slab to match the crown of the roadway surface.

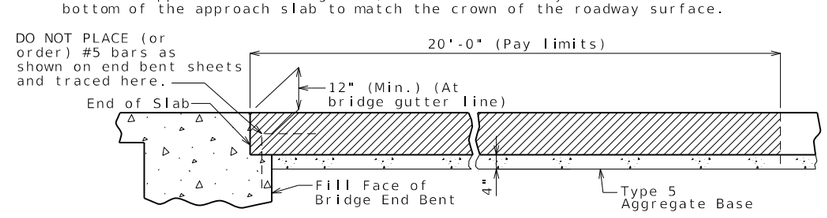

SECTION D-D

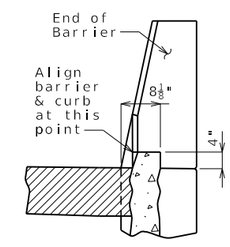

4" TYPE S CURB
See Missouri Standard Plan 609.00 for details of Type S curb.

OPTIONAL ASPHALT SLAB (NOT ALLOWED WITH CONCRETE PAVEMENT)

BRIDGE APPROACH SLAB (MINOR)

Integral end bents shown, non-integral end bent similar. May be removed if end bents are integral

DATE PREPARED	12/29/2023
ROUTE	MO
DISTRICT	BR
SHEET NO.	22
COUNTY	
JOB NO.	
CONTRACT ID.	
PROJECT NO.	
BRIDGE NO.	EXAMPLE

DESCRIPTION

DATE

MISSOURI HIGHWAYS AND TRANSPORTATION COMMISSION

105 WEST CAPITOL
JEFFERSON CITY, MO 65102
1-888-ASK-MODOT (1-888-275-6636)

Detailed
Checked

Note: This drawing is not to scale. Follow dimensions.

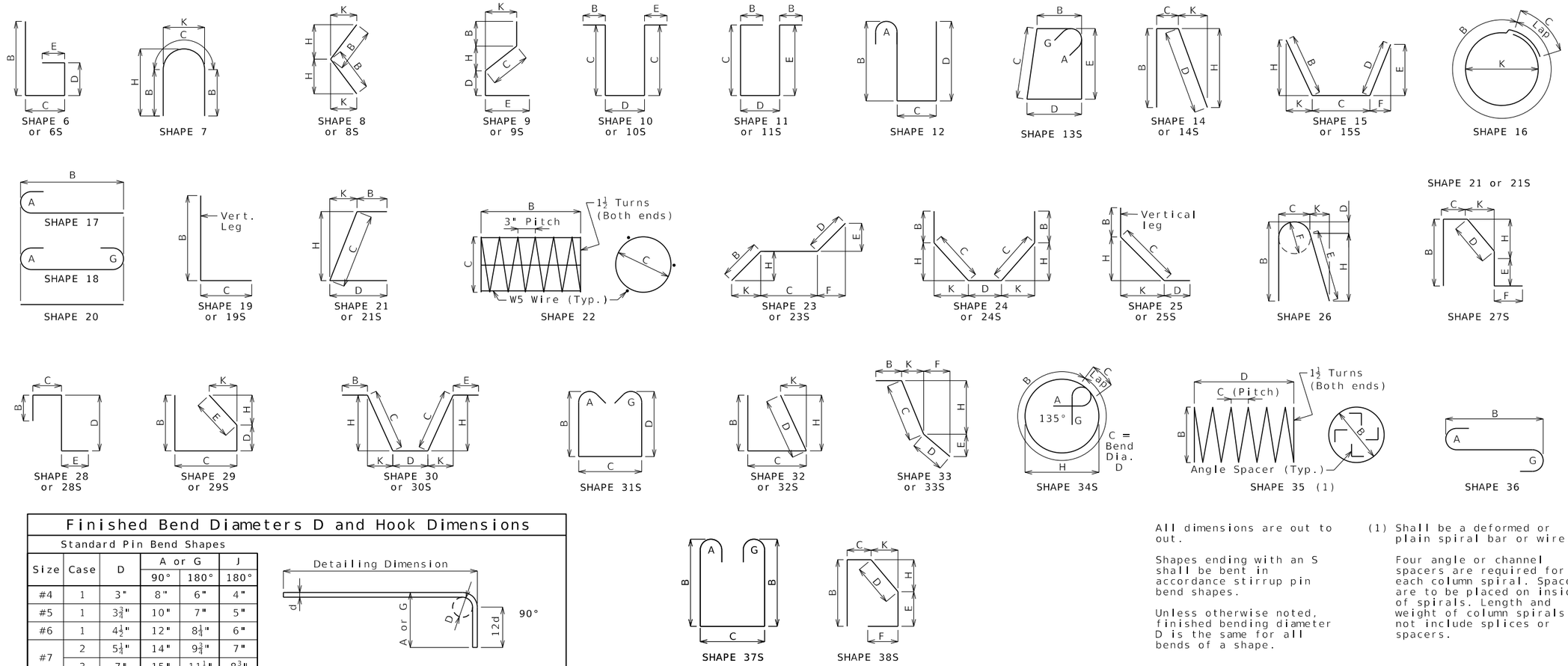

Finished Bend Diameters D and Hook Dimensions

Standard Pin Bend Shapes

Size	Case	D	A or G 90°	A or G 180°	J 180°
#4	1	3"	8"	6"	4"
#5	1	3¾"	10"	7"	5"
#6	1	4½"	12"	8¼"	6"
#7	2	5¼"	14"	9¾"	7"
	3	7"	15"	11½"	8¾"
#8	2	6"	16"	11"	8"
	3	8"	17"	13¼"	10"
#9	1	9½"	19½"	15½"	11¾"
#10	1	10¾"	22"	17½"	13¼"
#11	1	12"	24½"	19½"	14⅞"
#14	1	18¼"	31¼"	27½"	21⅝"
#18	1	24"	41½"	36¼"	28½"

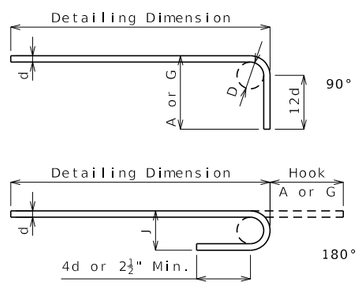

Stirrup Pin Bend Shapes (S)

Size	Case	D	A or G 90°	A or G 135°	A or G 180°	H 135°	J 180°
#4	2	2"	4½"	4½"	5"	2⅝"	3"
	3	3"	5"	5¼"	6"	3"	4"
#5	2	2½"	5¾"	5¾"	5¾"	3⅝"	3¾"
	3	3¾"	6¼"	6½"	7"	3⅞"	5"
#6	1	4½"	12"	7¾"	8¼"	4⅝"	6"

Applicable for all grades of steel.

Case 1 applies to all reinforcement. Case 2 applies to all reinforcement except for galvanized bars. Case 3 applies to galvanized bars only.

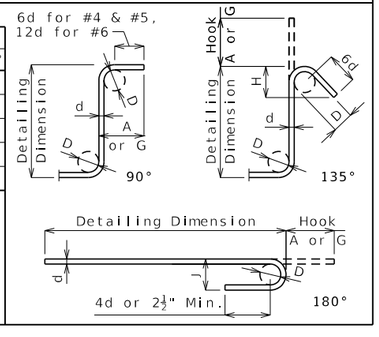

BENDING DIAGRAMS

All dimensions are out to out.

Shapes ending with an S shall be bent in accordance stirrup pin bend shapes.

Unless otherwise noted, finished bending diameter D is the same for all bends of a shape.

(1) Shall be a deformed or plain spiral bar or wire.

Four angle or channel spacers are required for each column spiral. Spacers are to be placed on inside of spirals. Length and weight of column spirals do not include splices or spacers.

Reinforcing Steel Totals (Pounds)

	Size	Substructure Plain	Substructure Galv.	Superstructure Slab Plain	Superstructure Slab Galv.	Superstructure Barrier	Superstructure Slip Form	Entire Bridge Plain	Entire Bridge Galv.
By Size	W5	0	0	0	0	0	0	0	0
	4	600	0	0	1,549	0	0	600	1,549
	5	28,144	0	222	35,728	19,785	1,079	28,366	56,592
	6	10,929	0	0	95,155	0	0	10,929	95,155
	7	0	0	0	14,428	0	0	0	14,428
	8	5,934	0	0	684	0	0	5,934	684
	9	0	0	0	0	0	0	0	0
	10	0	0	0	0	0	0	0	0
	11	89,872	0	0	0	0	0	89,872	0
	14	0	0	0	0	0	0	0	0
	18	0	0	0	0	0	0	0	0
By Type		135,479	0	222	147,544	19,785	1,079	135,701	168,408

All superstructure reinforcing steel shall be galvanized unless otherwise specified.

This table is generated by the Barbill Program. See BarBill Program Manual.

BENDING DIAGRAMS AND REINFORCING STEEL TOTALS

Detailed Mar. 2024
Checked Mar. 2024

Note: This drawing is not to scale. Follow dimensions.

DATE PREPARED	3/27/2024
ROUTE	13
STATE	MO
DISTRICT	BR
SHEET NO.	28
COUNTY	HENRY
JOB NO.	J7P3484C
CONTRACT ID.	
PROJECT NO.	
BRIDGE NO.	A9339

DESCRIPTION

DATE

MISSOURI HIGHWAYS AND TRANSPORTATION COMMISSION
105 WEST CAPITOL
JEFFERSON CITY, MO 65102
1-888-ASK-MODOT (1-888-275-6636)

Bill of Reinforcing Steel

No. Req.	Size/ Mark	Location	Codes C	SH	V	Dimensions B ft in.	C ft in.	D ft in.	E ft in.	F ft in.	H ft in.	K ft in.	Nom. Length ft in.	Actual Length ft in.	Weight lb
		Substructure													
		Int Bent 2													
42	6 D200	BEAM		20		4 2.00							4 2	4 2	263
20	8 H200	BEAM		20		38 5.00							38 5	38 5	2,051
28	6 H201	BEAM		20		38 5.00							38 5	38 5	1,616
20	11 H202	BEAM		18		38 5.00							41 7	41 7	4,419
36	6 H203	BEAM		10S			12.00	5 7.50					7 8	7 4	397
20	6 H204	BEAM		20		4 5.00							4 5	4 5	133
2	5 P200	DRILLED SHAFT		35		5 0.00	6.00	59 10.25					1928 5	1908 5	3,981
2	5 P201	DRILLED SHAFT		35		5 0.00	6.00	59 3.00					1909 6	1889 7	3,942
2	5 P202	COLUMN		35		5 0.00	3.00	14 9.75					977 11	967 9	2,019
80	5 P203	BEAM		34S		15 8.50	2.50				5 0.00		16 10	16 8	1,391
2	5 P204	COLUMN		35		5 0.00	3.00	14 8.25					970 1	960	2,003
56	6 U200	BEAM		13S		5 9.00	5 9.00	5 9.00	5 9.00				24 4	23 10	2,005
2	6 U201	BEAM		13S		5 9.00	6 1.00	5 9.00	6 1.00				25	24 6	74
14	6 U202	BEAM		10S			5 9.00	5 9.00					17 3	16 11	356
6	6 U203	BEAM		10S			6 1.00	5 9.00					17 11	17 7	158
32	4 U204	BEAM		10S			6.00	5 9.00					6 9	6 7	141
48	11 V200	DRILLED SHAFT		20		32 0.00							32	32	8,161
48	11 V201	DRILLED SHAFT		20		30 0.00							30	30	7,651
24	11 V202	COLUMN		20		12 8.00							12 8	12 8	1,615
24	11 V203	COLUMN		20		10 8.00							10 8	10 8	1,360
24	11 V204	COLUMN		20		12 6.00							12 6	12 6	1,594
24	11 V205	COLUMN		20		10 6.00							10 6	10 6	1,339
48	11 V206	DRILLED SHAFT		20		37 6.00							37 6	37 6	9,563
48	11 V207	DRILLED SHAFT		20		36 11.00							36 11	36 11	9,415
		Int Bent 3													
42	6 D300	BEAM		20		4 2.00							4 2	4 2	263
20	8 H300	BEAM		20		38 5.00							38 5	38 5	2,051
28	6 H301	BEAM		20		38 5.00							38 5	38 5	1,616
20	11 H302	BEAM		18		38 5.00							41 7	41 7	4,419
36	6 H303	BEAM		10S			12.00	5 7.50					7 8	7 4	397
20	6 H304	BEAM		20		4 5.00							4 5	4 5	133
28	8 H305	TIE BEAM		18		22 8.00							24 6	24 6	1,832
28	6 H306	TIE BEAM		20		22 0.00							22	22	925
2	5 P300	DRILLED SHAFT		35		5 0.00	6.00	46 3.00					1500 10	1485 3	3,098
2	5 P301	DRILLED SHAFT		35		5 0.00	6.00	47 3.00					1532 3	1516 4	3,163
2	5 P302	COLUMN		35		5 0.00	3.00	26 10.25					1734 8	1716 7	3,581
80	5 P303	BEAM		34S		15 8.50	2.50				5 0.00		16 10	16 8	1,391
2	5 P304	COLUMN		35		5 0.00	3.00	26 9.75					1732	1714	3,575
56	6 U300	BEAM		13S		5 9.00	5 9.00	5 9.00	5 9.00				24 4	23 10	2,005
2	6 U301	BEAM		13S		5 9.00	6 1.00	5 9.00	6 1.00				25	24 6	74
14	6 U302	BEAM		10S			5 9.00	5 9.00					17 3	16 11	356
6	6 U303	BEAM		10S			6 1.00	5 9.00					17 11	17 7	158
32	4 U304	BEAM		10S			6.00	5 9.00					6 9	6 7	141
28	4 U305	TIE BEAM		13S		2 6.00	5 9.00	2 6.00	5 9.00				17 3	17	318
24	11 V300	DRILLED SHAFT		20		53 11.00							53 11	53 11	6,875
24	11 V301	DRILLED SHAFT		20		55 11.00							55 11	55 11	7,130
24	11 V302	COLUMN		20		24 8.00							24 8	24 8	3,145
24	11 V303	COLUMN		20		22 8.00							22 8	22 8	2,890
24	11 V304	DRILLED SHAFT		20		54 11.00							54 11	54 11	7,003
24	11 V305	DRILLED SHAFT		20		56 11.00							56 11	56 11	7,258
24	11 V306	COLUMN		20		24 8.00							24 8	24 8	3,145
24	11 V307	COLUMN		20		22 8.00							22 8	22 8	2,890
		Superstructure													
		End Bent 1													
8	6 F100	WING BRACE	G	23S		2 2.75	5 2.00	14.25	10.00	10.00	19.00	19.00	8 7	8 6	105
8	6 F101	DIAPHRAGM	G	6S		5 0.00	2 8.00	17.00					9 1	8 9	108
12	7 H100	BM & DIAPH	G	20		40 5.00							40 5	40 5	1,016
8	6 H101	BM & DIAPH	G	20		40 5.00							40 5	40 5	500
4	6 H102	BEAM	G	20		4 5.00							4 5	4 5	27
9	6 H103	DIAPHRAGM	G	20		10 3.00							10 3	10 3	143
3	6 H104	DIAPHRAGM	G	20		7 10.00							7 10	7 10	36
6	6 H105	DIAPHRAGM	G	20		2 8.00							2 8	2 8	25
4	5 H107	STRAND TIE		20		5 9.00							5 9	5 9	24
8	8 H108	WING	G	19		14 7.00	16.00						15 11	15 8	342
18	6 H109	WING	G	19S		13 8.00	12.00						14 8	14 6	403
22	5 U100	BEAM	G	31S		5 1.00	2 9.00	5 1.00					14	13 9	326
17	4 U101	BEAM	G	13S		2 9.00	2 8.00	2 9.00	2 8.00				11 8	11 4	134
8	4 U102	BEAM	G	13S		2 9.00	3 0.00	2 9.00	3 0.00				12 4	12	67
5	4 U103	BEAM	G	10S			2 8.00	2 9.00					8 1	7 10	27
25	5 U104	DIAPHRAGM	G	31S		3 4.00	2 3.00	3 4.00					10	9 9	263
25	6 U105	DIAPHRAGM	G	19S		2 2.00	2 9.00						4 11	4 9	183
51	6 U106	DIAPHRAGM	G	19S		3 4.00	4 7.00						7 11	7 9	611
38	5 U107	DIAPHRAGM	G	19S		2 0.00	15.00						3 3	3 1	126
6	5 V100	BEAM	G	17		5 1.00							5 8	5 8	37
20	6 V101	DIAPHRAGM	G	20		2 2.00							2 2	2 2	67
26	6 V102	WING	G	20		6 5.00							6 5	6 5	258
		End Bent 6													
8	6 F600	WING BRACE	G	23S		2 2.75	5 2.00	14.25	10.00	10.00	19.00	19.00	8 7	8 6	105
8	6 F601	DIAPHRAGM	G	6S		5 0.00	2 8.00	17.00					9 1	8 9	108
12	7 H600	BM & DIAP	G	20		40 5.00							40 5	40 5	1,016
8	6 H601	BM & DIAPH	G	20		40 5.00							40 5	40 5	500
4	6 H602	BEAM	G	20		4 5.00							4 5	4 5	27
9	6 H603	DIAPHRAGM	G	20		10 3.00							10 3	10 3	143
3	6 H604	DIAPHRAGM	G	20		7 10.00							7 10	7 10	36
6	6 H605	DIAPHRAGM	G	20		2 8.00							2 8	2 8	25
4	5 H607	STRAND TIE		20		5 9.00							5 9	5 9	24
8	8 H608	WING	G	19		14 7.00	16.00						15 11	15 8	342
18	6 H609	WING	G	19S		13 8.00	12.00						14 8	14 6	403
22	5 U600	BEAM	G	31S		5 1.00	2 9.00	5 1.00					14	13 9	326
17	4 U601	BEAM	G	13S		2 9.00	2 8.00	2 9.00	2 8.00				11 8	11 4	134
8	4 U602	BEAM	G	13S		2 9.00	3 0.00	2 9.00	3 0.00				12 4	12	67
5	4 U603	BEAM	G	10S			2 8.00	2 9.00					8 1	7 10	27
25	5 U604	DIAPHRAGM	G	31S		3 4.00	2 3.00	3 4.00					10	9 9	263
25	6 U605	DIAPHRAGM	G	19S		2 2.00	2 9.00						4 11	4 9	183
51	6 U606	DIAPHRAGM	G	19S		3 4.00	4 7.00						7 11	7 9	611
38	5 U607	DIAPHRAGM	G	19S		2 0.00	15.00						3 3	3 1	126
6	5 V600	BEAM	G	17		5 1.00							5 8	5 8	37
20	6 V601	DIAPHRAGM	G	20		2 2.00							2 2	2 2	67
26	6 V602	WING	G	20		6 5.00							6 5	6 5	258
		Int Diaphragms													
48	4 H700	DIAPHRAGM	G	20		10 6.00							10 6	10 6	351
24	6 H701	DIAPHRAGM	G	20		10 3.00							10 3	10 3	380
24	6 H702	DIAPHRAGM	G	20		7 10.00							7 10	7 10	290
16	5 H703	STRAND TIE		20		5 9.00							5 9	5 9	96
16	5 H704	STRAND TIE		20		4 8.00							4 8	4 8	78
168	4 U700	DIAPHRAGM	G	28S			23.00	3 2.00	18.00				6 7	6 4	742
48	6 U701	DIAPHRAGM	G	28S			2 2.00	3 2.00	2 2.00				7 6	7 2	531
80	6 U702	DIAPHRAGM	G	28S			2 2.00	2 6.00	2 2.00				6 10	6 6	803
48	5 U703	DIAPHRAGM	G	6S		4 6.00	14.00	16.00					7	6 9	350
16	5 U704	DIAPHRAGM	G	19S		4 6.00	14.00						5 8	5 6	95
32	5 V700	DIAPHRAGM	G	20		3 3.00							3 3	3 3	112
		Slab													
525	6 S1	SLAB	G	20		54 4.00							54 4	54 4	44,071
772	5 S2	SLAB	G	20		40 5.00							40 5	40 5	33,667
707	6 S3	SLAB	G	20		40 5.00							40 5	40 5	44,148
64	7 S4	SLAB	G	20		26 0.00							26	26	3,484
64	7 S5	SLAB	G	20		16 0.00							16	16	2,144
64	7 S6	SLAB	G	20		33 6.00							33 6	33 6	4,490
64	7 S7	SLAB	G	20		17 0.00							17	17	2,278
		Barrier													
		Type D													
10	5 K1	BARRIER	G	27S		3 8.00	9.25	5.25	3 2.75		5.25	1.00	8 1	7 11	85

Nominal lengths are based on out to out dimensions shown in bending diagrams and are listed to the nearest inch for fabricator's use. Actual lengths are measured along centerline bar to the nearest inch. Weights are based on actual lengths.

For bending diagrams and steel reinforcing totals, see Sheet No. 28.

All bars shall be Grade 60.

Codes: C = Required coatings, where E = Epoxy Coated and G = Galvanized.

SH = Required shape, see bending diagrams.

V = Sets of varied bars and number of bars of each length. Bar dimensions vary in equal increments between dimensions shown on this line and the following line and the actual length dimension shown on this line and the following line vary by the specified increment.

Detailed Mar. 2024
Checked Mar. 2024

BILL OF REINFORCING STEEL

Note: This drawing is not to scale. Follow dimensions.

DATE PREPARED 3/27/2024
ROUTE 13 STATE MO
DISTRICT BR SHEET NO. 29
COUNTY HENRY
JOB NO. J7P3484C
CONTRACT ID.
PROJECT NO.
BRIDGE NO. A9339

DESCRIPTION | DATE

MISSOURI HIGHWAYS AND TRANSPORTATION COMMISSION
105 WEST CAPITOL
JEFFERSON CITY, MO 65102
1-888-ASK-MODOT (1-888-275-6636)

This data is generated by the Barbill Program. See the Barbill Program Manual in Instructions & Tips. (2nd sheet of data not shown, but is similar.)

Standard sheet found in ProjectWiseunder Bridge/Br_Std_Dwgs/Piles PIL/Current/PILE03_dynamic_formula_as_built_pile_data.dgn

As Built Drilled Shaft Data standard drawing can be found in ProjectWise under Bridge/Br_Std_Dwgs/Drilled Shaft DSS/Current/DSS_01_as_built_dshaft.dgn

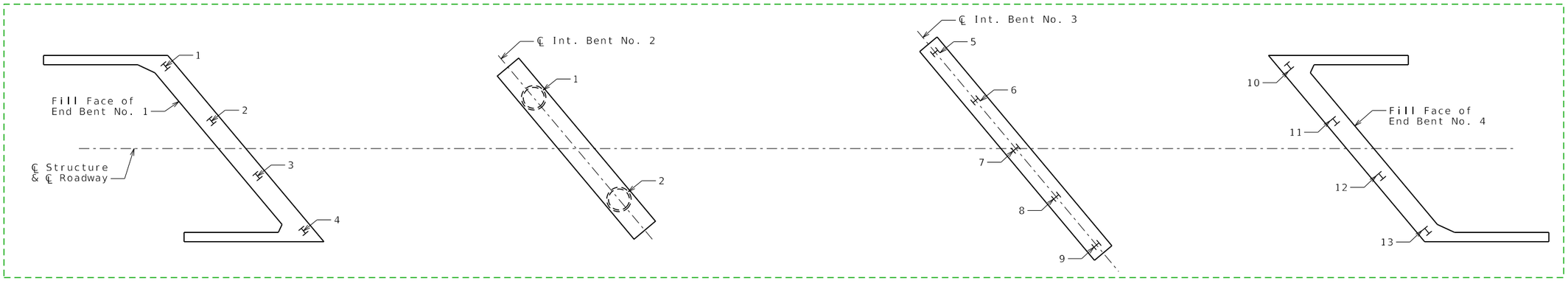

This portion drawn by detailer

PART PLAN SHOWING PILE & DRILLED SHAFT NUMBERING FOR RECORDING AS-BUILT PILE DATA & AS-BUILT DRILLED SHAFT DATA

As Built Pile Data and As Built Drilled Shaft Data may be combined on one sheet as shown here.

Modify table lengths as needed.

As-Built Pile Data

Pile No.	Length in Place (ft)	Computed Nominal Axial Compressive Resistance (kips)	Remarks
			End Bent No. 1
1			
2			
3			
4			

As-Built Pile Data

Pile No.	Length in Place (ft)	Computed Nominal Axial Compressive Resistance (kips)	Remarks
			Int. Bent No. 3
5			
6			
7			
8			
9			
			End Bent No. 4
10			
11			
12			
13			

As-Built Drilled Shaft Data

Shaft No.	Top of Sound Rock (Elev.)	Tip of Casing (Elev.)	Bottom of Rock Socket (Elev.)	Remarks
				Int. Bent No. 2
1				
2				

Note:
Indicate in remarks column:
A. Pile type and grade
B. Batter
C. Driven to practical refusal

This sheet to be completed by MoDOT construction personnel.

AS-BUILT PILE AND DRILLED SHAFT DATA

Detailed May 2023
Checked May 2023

Note: This drawing is not to scale. Follow dimensions.

DATE PREPARED 5/19/2023
ROUTE | STATE MO
DISTRICT BR | SHEET NO. 25
COUNTY
JOB NO.
CONTRACT ID.
PROJECT NO.
BRIDGE NO. EXAMPLE

DESCRIPTION | DATE

MISSOURI HIGHWAYS AND TRANSPORTATION COMMISSION
105 WEST CAPITOL
JEFFERSON CITY, MO 65102
1-888-ASK-MODOT (1-888-275-6636)

Missouri Department of Transportation

SUBSURFACE DIAGRAM

PROJECT NAME Bridge Replacement
PROJECT LOCATION Over Gunns Branch
CLIENT
PROJECT NUMBER J3P0568-A7640

USCS Low Plasticity Clay
USCS Poorly-graded Sand
USCS Poorly-graded Gravel
USCS High Plasticity Clay

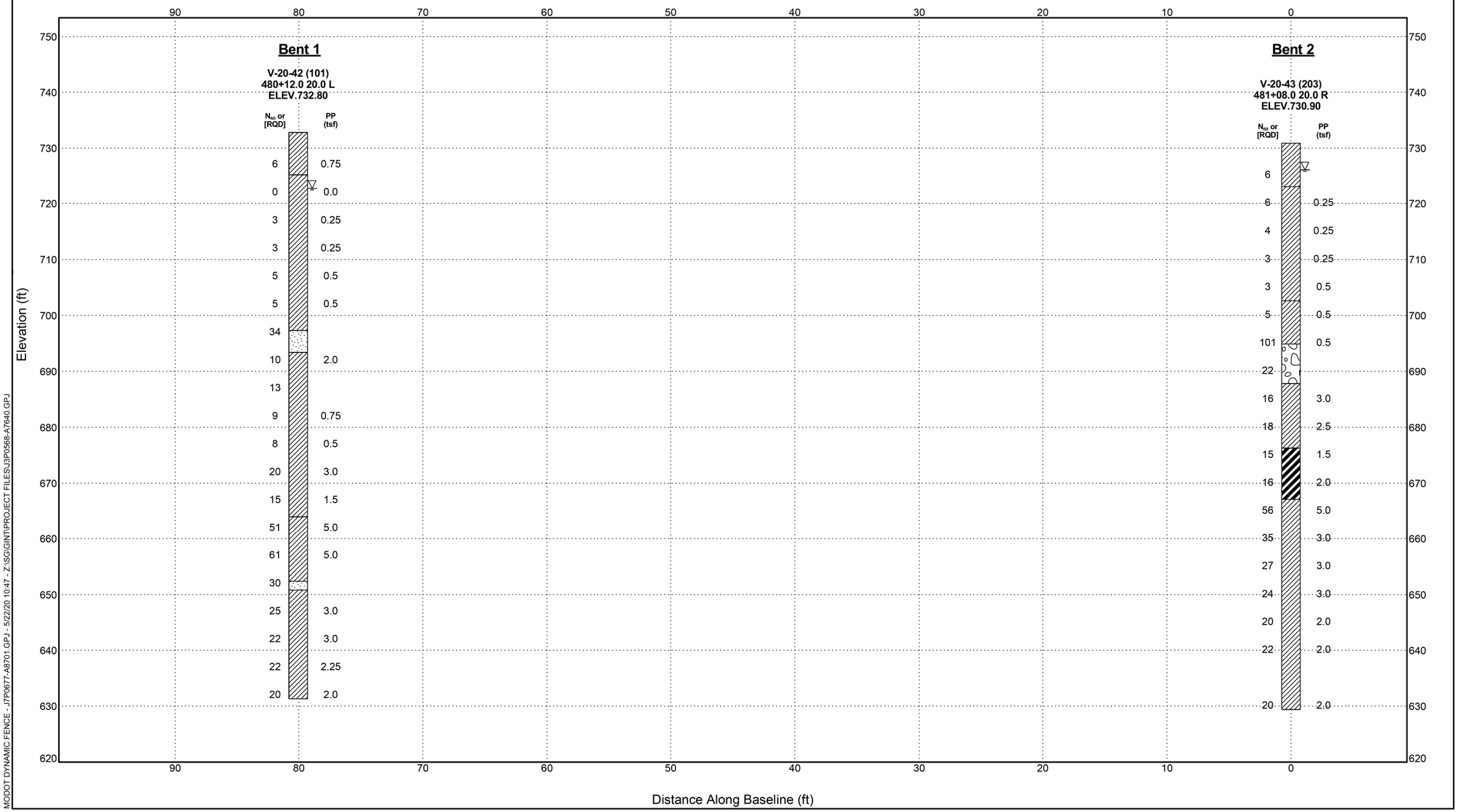

MODOT DYNAMIC FENCE - J7P0677-A8701.GPJ - 5/22/20 10:47 - Z:\SG\GINTPROJECT FILES\J3P0568-A7640.GPJ

DATE PREPARED	5/19/2023
ROUTE	
STATE	MO
DISTRICT	BR
SHEET NO.	26
COUNTY	
JOB NO.	
CONTRACT ID.	
PROJECT NO.	
BRIDGE NO.	EXAMPLE

DESCRIPTION | DATE

MISSOURI HIGHWAYS AND TRANSPORTATION COMMISSION
105 WEST CAPITOL
JEFFERSON CITY, MO 65102
1-888-ASK-MODOT (1-888-275-6636)

IF A SEAL IS PRESENT ON THIS SHEET IT HAS BEEN ELECTRONICALLY SEALED AND DATED.

Geotechnical ("boring") data for this example is from Br. No. A7640

Showing only one boring sheet in this example, but there may be several.

Standard sheet found in ProjectWise under Bridge/Br_Std_Dwgs/Boring Template BOR/Current.

Instructions for Attaching Boring Log PDFs to Final Plans is available inDevelopment Section Sharepoint, Instructions & Tips.

BORING DATA

Note: For locations of borings, see Sheet No. 1.

Note: This drawing is not to scale. Follow dimensions.

Detailed May 2023
Checked May 2023